AL/CF-TR-1994-0183

ARMSTRONG LABORATORY

ANTHROPOMORPHIC CUTANEOUS TACTILE SENSING ON DEXTEROUS MECHANICAL HANDS

Allen R. Grahn

BONNEVILLE SCIENTIFIC, INC.
1849 W. NO. TEMPLE, BLDG. E
SALT LAKE CITY, UT 84116

DTIC
SELECTED
SEP 0 8 1995
G

19950906 068

AUGUST 1994

FINAL REPORT FOR THE PERIOD JANUARY 1991 TO JUNE 1994

Approved for public release; distribution is unlimited

DTIC QUALITY INSPECTED 1

AIR FORCE MATERIEL COMMAND
WRIGHT-PATTERSON AIR FORCE BASE, OHIO 45433-7901

DISCLAIMER NOTICE

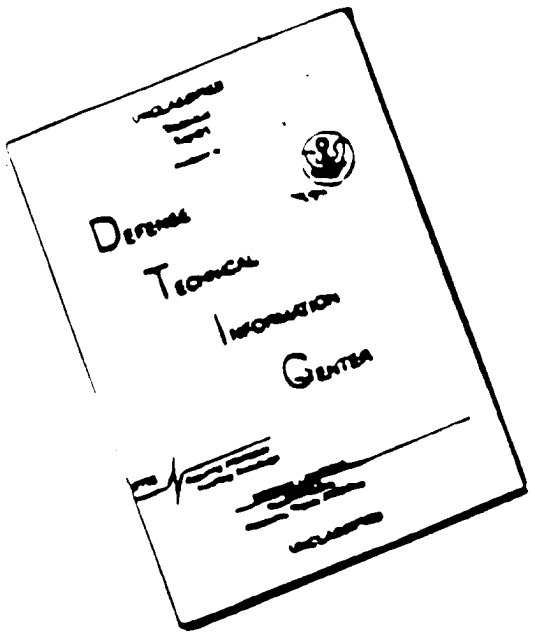

THIS DOCUMENT IS BEST QUALITY AVAILABLE. THE COPY FURNISHED TO DTIC CONTAINED A SIGNIFICANT NUMBER OF PAGES WHICH DO NOT REPRODUCE LEGIBLY.

NOTICE

When US Government drawings, specifications, or other data are used for any purpose other than a definitely related Government procurement operation, the Government thereby incurs no responsibility nor any obligation whatsoever, and the fact that the Government may have formulated, furnished, or in any way supplied the said drawings, specifications, or other data, is not to be regarded by implication or otherwise, as in any manner, licensing the holder or any other person or corporation, or conveying any rights or permission to manufacture, use or sell any patented invention that may in any way be related thereto.

Please do not request copies of this report from the Armstrong Laboratory. Additional copies may be purchased from:

National Technical Information Service
5285 Port Royal Road
Springfield VA 22161

Federal Government agencies and their contractors registered with Defense Technical Information Center should direct requests for copies of this report to:

Defense Technical Information Center
Cameron Station
Alexandria VA 22314

TECHNICAL REVIEW AND APPROVAL

AL/CF-TR-1994-0183

DISCLAIMER

This Technical Report is published as received and has not been edited by the technical editing staff of the Armstrong Laboratory.

This report has been reviewed by the Office of Public Affairs (PA) and is releasable to the National Technical Information Service (NTIS). At NTIS, it will be available to the general public, including foreign nations.

This technical report has been reviewed and is approved for publication.

FOR THE COMMANDER

THOMAS J. MOORE, Chief
Biodynamics and Biocommunications Division
Crew Systems Directorate
Armstrong Laboratory

REPORT DOCUMENTATION PAGE

Form Approved
OMB No. 0704-0188

Public reporting burden for this collection of information is estimated to average 1 hour per response, including the time for reviewing instructions, searching existing data sources, gathering and maintaining the data needed, and completing and reviewing the collection of information. Send comments regarding this burden estimate or any other aspect of this collection of information, including suggestions for reducing this burden, to Washington Headquarters Services, Directorate for Information Operations and Reports, 1215 Jefferson Davis Highway, Suite 1204, Arlington, VA 22202-4302, and to the Office of Management and Budget, Paperwork Reduction Project (0704-0188), Washington, DC 20503.

1. AGENCY USE ONLY *(Leave blank)*	2. REPORT DATE	3. REPORT TYPE AND DATES COVERED
	August 1994	FINAL - JANUARY 1991 - JUNE 1994

4. TITLE AND SUBTITLE
Anthropomorphic Cutaneous Tactile Sensing on Dexterous Mechanical Hands

5. FUNDING NUMBERS
C - F41624-91-C-6001
PE - 65502F
PR - 3005
TA - B2
WU - 04

6. AUTHOR(S)
Allen R. Grahn

7. PERFORMING ORGANIZATION NAME(S) AND ADDRESS(ES)
Bonneville Scientific, Inc.
1849 W. No. Temple, Bldg. E
Salt Lake City, UT 84116

8. PERFORMING ORGANIZATION REPORT NUMBER

9. SPONSORING/MONITORING AGENCY NAME(S) AND ADDRESS(ES)
Armstrong Laboratory, Crew Systems Directorate
Biodynamics and Biocommunications Division
Human Systems Center
Air Force Materiel Command
Wright-Patterson AFB, OH 45433-7901

10. SPONSORING/MONITORING AGENCY REPORT NUMBER
AL/CF-TR-1994-0183

11. SUPPLEMENTARY NOTES

12a. DISTRIBUTION/AVAILABILITY STATEMENT
Approved for public release; distribution is unlimited.

12b. DISTRIBUTION CODE

13. ABSTRACT *(Maximum 200 words)*

The goal of this Phase II SBIR contract was to 1) design, fabricate and install ultrasonically-based tactile sensors and their associated cables on the Utah/MIT Dextrous Hand (UMDH) supplied by the Air Force, 2) develop compact tactile sensor support electronics for mounting locally, near the sensors, 3) design, construct and test a microprocessor subsystem for operating the sensors, 4) interface the microprocessor subsystem to a host Sun workstation, and 5) write software for controlling the tactile sensors and displaying "raw" sensor data.

Planar and wrap-around arrays were installed on all three digit segments of the thumb and index fingers, and on the finger-tips of the remaining two digits (although these were not connected to the electronics). The sensors were designed so that they could be removed with minimal risk of damage in order to replace tendons in the digits.

14. SUBJECT TERMS			15. NUMBER OF PAGES
tactile sensing	robotics	dexterous hands	200
			16. PRICE CODE

17. SECURITY CLASSIFICATION OF REPORT	18. SECURITY CLASSIFICATION OF THIS PAGE	19. SECURITY CLASSIFICATION OF ABSTRACT	20. LIMITATION OF ABSTRACT
UNCLASSIFIED	UNCLASSIFIED	UNCLASSIFIED	UL

This page intentionally left blank.

TABLE OF CONTENTS

TABLE OF CONTENTS iii

INTRODUCTION 1
SUMMARY 1
PREFACE 2

METHODS, ASSUMPTIONS, PROCEDURES, RESULTS AND DISCUSSION 3
Kick-Off Meeting and Ensuing Tasks 3
Objective 1--Tactile Sensor Design, Fabrication, Installation, and Test 3
Task 1--Tactile Sensor Design 3
Task 2--Tactile Array Patterns by Screening 7
Task 3--Sensor Coverings 7
Task 4--Embedded Reflectors 14
Task 5--Sensor Construction 15
Task 6--Sensor Installation 18
Task 7--Sensor Evaluation 21
Objective 2--Sensor Interconnect and Cable Routing 24
Task 1--Measure Relevant Finger Dimensions 24
Task 2--Determine Cable Geometry and Dimensions 24
Task 3--Determine Cable Routing 27
Task 4--Determine Method for Cable Flexing 27
Task 5--Test Flex Method 27
Task 6--Design Cables 27
Task 7--Fabricate Cables 30
Objective 3--Tactile Sensor System Electronics 31
Introduction 31
Task 1--Increase Addressing Capability 31
Task 2--Receiving Multiplexing 31
Task 3--Transmitting Multiplexing 33
Task 4--Interface Board Address 38
Task 5--Increase Receiver Gain 38
Test Fixture 39
Junction Box 42
Task 6--Install in Existing Electronics 44
Task 7--Test and Debug Electronics 44
Documentation 44
Objective 4--Tactile Sensor System Software 44
Hardware 45
Software 46
Documentation 47
Objective 5--Tactile Sensor System Evaluation 47

CONTRACT MODIFICATION 48

CONTRACT EXTENSION 48

CONCLUSIONS 48

RECOMMENDATIONS 49

BIBLIOGRAPHY 50

APPENDICES 51

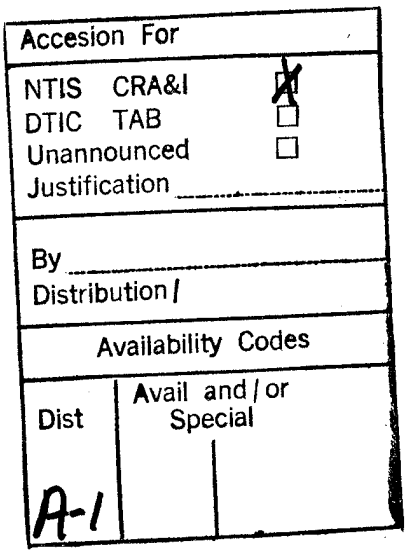

LIST OF FIGURES

Figure		Page
1	Tactile Sensor Arrays for the Three Finger Segments	5
2	Tactile Sensor Arrays for the Three Finger Segments	6
3	Geometry of Redesigned Tactile Sensors	8
4	Force vs Displacement Characteristics for Skinflex III and Ciba-Geigy Rubber	10
5	Rubber Compression Characteristics for 25% Compression at Peak Force Without 2-Minute Hold	12
6	Rubber Compression Characteristics for 25% Compression with 2-Minute Hold at Peak Force	13
7	Shape of Metal Bases for the Tactile Sensors	19
8	Tactile Image of a Round Bar Placed Across the Flat Redesigned Finger-Tip Sensor	25
9	Tactile Image Produced by Laterally Grasping the Curved Redesigned Sensor and Pressing the Palmar Array Against the Lab Bench Top	26
10	Cables for the Three Finger Segments	28
11	Cable Photomask for Proximal Segment Arrays	29
12	Receiving Column Multiplexing Scheme	32
13	Schematic for Receiving Column Multiplexing Board	34
14	Receiving Multiplexer Board Design	35
15	Circuit Board for 14 Pulsers	36
16	Sensor Scan Pattern	37
17	Component Side of 24-channel Receiving Board	40
18	Component side of 16-channel Excitation Board	41
19	Tactile Image of a Washer Using the Test Fixture	43

LIST OF FIGURES (cont.)

Appendix		Page
1	Array Construction and Principle of Operation	56
2	Tactile Sensor with Separate Transmitting and Receiving Layers	56
3	Beam Patterns for Sensor Shown in Figure 6	57

INTRODUCTION

SUMMARY

This report covers the work done on Phase II SBIR contract #F41624-91-C-6001, Anthropomorphic Cutaneous Tactile Sensing on Dexterous Mechanical Hands. The goal of this project was to 1) design, fabricate and install tactile sensors and their associated cables on the Utah/MIT Dextrous Hand (UMDH) supplied by the Air Force, 2) develop compact tactile sensor support electronics for mounting locally, near the sensors, 3) design, construct and test a microprocessor subsystem for operating the sensors, 4) interface the microprocessor subsystem to a host Sun workstation, and 5) write software for controlling the tactile sensors and displaying "raw" sensor data.

This contract consisted of the original 24-month contract period, followed by a nine-month contract extension. During the first 24 months of the contract the following goals were achieved.

1. A design and fabrication technique was developed for the tactile sensors which would result is full (i.e., 360° around the digit) tactile sensitivity of the three digit segments, without insensitive areas. This was achieved by having all electrical connections to the tactile elements lie underneath the sensors.
2. The number of tactile elements on the four digits was increased from the proposed value of 2304 to 3200.
3. The three sensors (comprising six tactile arrays) on a digit were redesigned so that they had separate cables, rather than all being interconnected by a single cable. This change tripled the number of cables which had to be fabricated and increased the number of leads from 48 to 82 per digit. However, separating the cables allows removal of individual sensors without damaging the other tactile sensors on the digit.
4. A technique was developed for fabricating miniature flex-circuit cables for the sensors which had 5 mil wide traces and 3 mil spaces. These cables were 0.015" thick and were comprised of 15 layers of material.
5. Removal bases were designed and constructed for the sensors. The bases were installed and secured on the hand without the need for machining the digit structures. Their design allows easy removal so that the tendons in the digit can be accessed.
6. Extensive changes were made to the proposed sensor electronics which greatly improved performance. These changes allowed a much broader range of echo signal amplitude to be detected so that contact with steeply angled or pointed objects could be quantitated.
7. A test fixture was constructed which was capable of scanning a single tactile array and graphically displaying the tactile data. This device allowed rapid testing of the sensors.
8. The microprocessor subsystem for controlling the sensors was changed from dual (68000) processors to a single, faster processor (68020).

9. A Sun workstation was added for a "host" computer for the tactile sensor system microprocessor.
10. Software was developed for operating the tactile sensors and for transferring the tactile data to and displaying the data on the Sun workstation.
11. Installation of all twelve tactile sensors on the UMDH.

At the end of the 24-month contract period, there was insufficient time left for full evaluation of the tactile sensor system. However, very preliminary evaluation, which was confined to testing tactile elements on a single array, showed that there was a high percentage of failed elements or elements having weak signals . Furthermore, the circuitry used for pulsing the sensors appeared to be insufficient. Measurement of sensor signals was complicated by the high noise level present (partially due to violating the shielding in order to make measurements) and the difficulty in probing the very small electrical contacts.

A nine-month contract extension was granted in order to more fully determine the extent and causes of failures in the tactile sensors and then to decide whether design changes could be made which would reduce or eliminate the sources of sensor failure. If such designs could be conceived and were deemed sufficiently practical, then a tactile sensor would be fabricated based upon these designs and evaluated.

Successful evaluation of this sensor would then lead to the fabrication, testing, and installation on the hand of additional sensors. Sensors would be installed in a prioritized order, with the degree of progress dependent upon the remaining resources in the contract.

During the contract extension, all 3200 tactile elements were evaluated and the sources of failure or marginal performance were identified. The sensors were redesigned to solve these problems. One of the changes made in sensor construction was to have the sensor connections exposed so that repairs could be made without removing the sensors from the hand. This change resulted in a reduced number of elements in each array and less than complete tactile coverage.

A complete set of sensors for the thumb and index fingers, and finger-tip sensors for the remaining two digits were installed on the hand. However, only the thumb and index finger sensors were wired to the electronics. Extensive changes were made to the pulser electronics and to the shielding and grounding of the sensor cables. Additional software was written for grouping the tactile sensor data to correspond to the location on the array giving rise to the data. This primitive display was used in verifying operation of the sensors.

Resources did not allow the installation of the medial and proximal sensor arrays on the middle and ring fingers or their connection to the sensor electronics.

PREFACE

This report covers the work done on Phase II SBIR contract #F41624-91-C-6001, Anthropomorphic Cutaneous Tactile Sensing on Dexterous Mechanical Hands. The original contract was for a 24-month period. During this time tactile sensors were fabricated and installed on the Utah/MIT Dextrous Hand supplied by the Air Force. Though previously tested, these sensors had a large number of failures after installation on the hand. A nine-

month contract extension was obtained in order to better determine the nature and cause of the failures and to remanufacture and install the tactile sensors.

Work conducted under this contract is presented chronologically under the various objectives and tasks. In an attempt to avoid confusion, work performed during the contract extension period is delineated through out this report by dashed lines at the beginning and the end of the text.

An explanation of the ultrasonic sensing technology used in the tactile sensors is given in Appendix 0.

METHODS, ASSUMPTIONS, PROCEDURES, RESULTS AND DISCUSSION

Kick-Off Meeting and Ensuing Tasks

A "kick-off" meeting was held at Bonneville Scientific on 25 February 1991. During that meeting, the Air Force expressed its desire to house the computer boards which operate their dexterous hand in the same enclosure as the one Bonneville was to provide for the tactile sensor system computers. Since the hand's computer boards communicate over the common bus in the enclosure, the Air Force stated that it would be impractical for our tactile sensor computers to communicate with their respective interface boards over this same bus. Consequently, it was agreed that Bonneville would conduct a trade study to determine whether a computer was available for the tactile sensor system that had a built-in parallel interfacing capability to eliminate using the bus for this function. The Air Force also wanted the tactile sensor system to operate somewhat autonomously, accepting commands from, and sending data to the Sun workstation over the VME bus in conjunction with a bus coupler.

Along with the above trade study, Bonneville was requested to estimate the cost of developing software for the new tactile sensor system microcomputer that would allow the computer to 1) operate the tactile sensors, 2) communicate with the bus coupler, 3) provide a debug and system checkout mode, and 4) extract specific information from the tactile data. Both the results of the trade study and the estimate of the software development costs are presented in Appendix 1 of this report.

Objective 1--Tactile Sensor Design, Fabrication, Installation, and Test

Task 1--Tactile Sensor Design

We began this task by taking approximate finger dimensions from assembly drawings supplied by the Air Force. These drawings were not to scale. With these measurements, we developed a preliminary layout for the sensor and cable connections. Bonneville conceived of an innovative casting procedure for making molds of the finger so that mold dimensions could then be accurately measured to obtain finger dimensions. However, when the finger itself was received from the Air Force, it was supplied with the rubber coverings for the three finger segments. We were able to determine finger surface geometry in the tactile sensor regions from casts made of the cavities in these coverings. These casts along with direct finger measurements provided a starting point from which modifications were made to accommodate

the tactile sensor structures and cabling. These measurements were entered into our CAD system to facilitate the design process.

In the past, Bonneville Scientific has increased the sensitivity of its tactile sensors by using multiple layers of PVDF which are made from a single sheet of PVDF that is folded over and creased. PVDF metalization at or in the vicinity of these creases would occasionally fail. Furthermore, this technique is difficult to use for tapered arrays. From another project, Bonneville had developed a method of electrically interconnecting the electrodes on different sheets of PVDF without using folds. The preliminary tactile sensor designs for the finger were redesigned for use with this technique.

At the request of the Air Force, Bonneville Scientific greatly increased the number of tactile elements in the arrays from the proposed number of 576 elements per digit. Figure 1 shows a preliminary design of the tactile sensor arrays. It is a scale drawing of the arrays for all three finger segments. The horizontal dark stripe in Figure 1 represents the array cables and exits from the wrap-around array at the top on each finger segment. The three planar arrays are the one "key-hole" and two trapezoidal shaped regions beneath the wrap-around sensors. The key-hole shaped array on the finger tip is not entirely planar, but rather curves upward at its rounded end to meet the edge of the wrap-around sensor.

Since the design of the tactile arrays shown in Figure 1 was made, the actual number of elements in each array was reduced. This change was made so that the elements in the finger-tip arrays would not be so small that their ultrasonic sensitivity would be insufficient. It was also reduced so as not to grossly exceed the capacity of the proposed number of multiplexing channels. In the revised design there are 800 tactile elements per digit, rather than the proposed number of 576. The finger-tip segment has 200 tactile elements versus the 192 proposed. More significantly, in the middle and basal or proximal finger segments there are 264 versus 192 elements, and 336 versus 192 elements, respectively. Figure 2 shows this tactile sensor design. The scale factor in Figure 2 is 2:1.

Sensor Design Changes to Reduce Failures. After the extensive sensor testing performed during the first three months of the contract extension (Task 7 of this objective), the tactile arrays were redesigned.

The largest cause of sensor failure was due to folding over the PVDF layers in order to bring the connections to the cable underneath the sensor. This procedure was used so that the sensors would provide full 360 degree coverage with no dead regions. It was concluded that folding of the PVDF could be eliminated by instead folding over a Kapton flex-circuit having the appropriate lead configuration and bonding pads for connecting to the cable and the PVDF. This approach has been very successfully used in our planar 16 x 16 tactile sensor. However, in order to provide room for connection to the PVDF metalization, some rows and columns of the array would have to be eliminated.

Another significant cause of sensor failure was scratching of the exposed metalized columns on the outer PVDF layer. Our solution to this problem was to cover this layer with another PVDF layer with its ground plane exposed. Because of its large area, small scratches through the ground plane metalization would not reduce sensor performance. Moreover, the additional PVDF layer used in transmitting would significantly increase the echo signal.

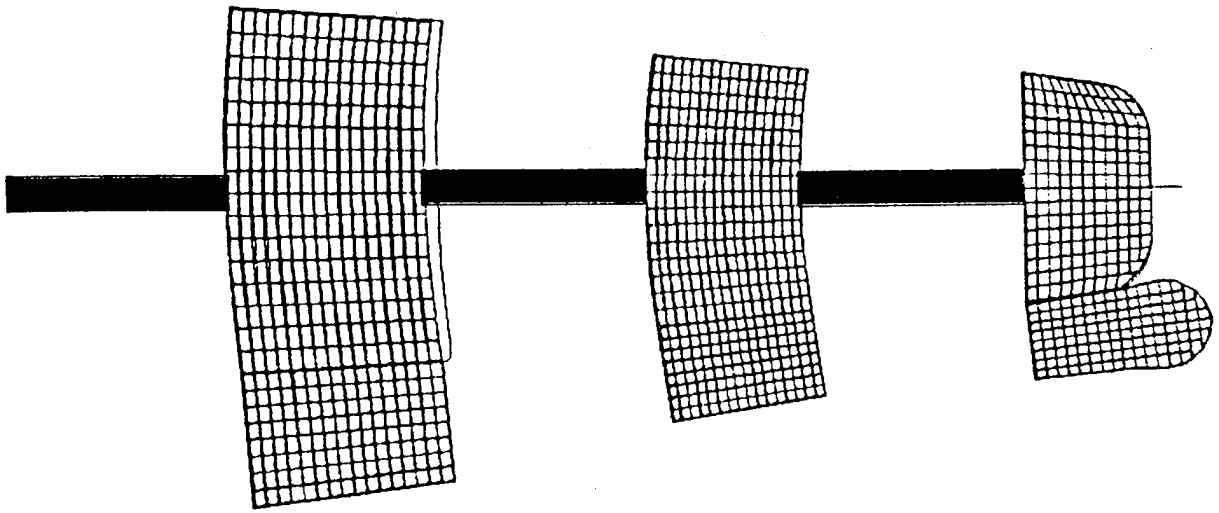

Figure 1. Tactile sensor arrays for the three finger segments.

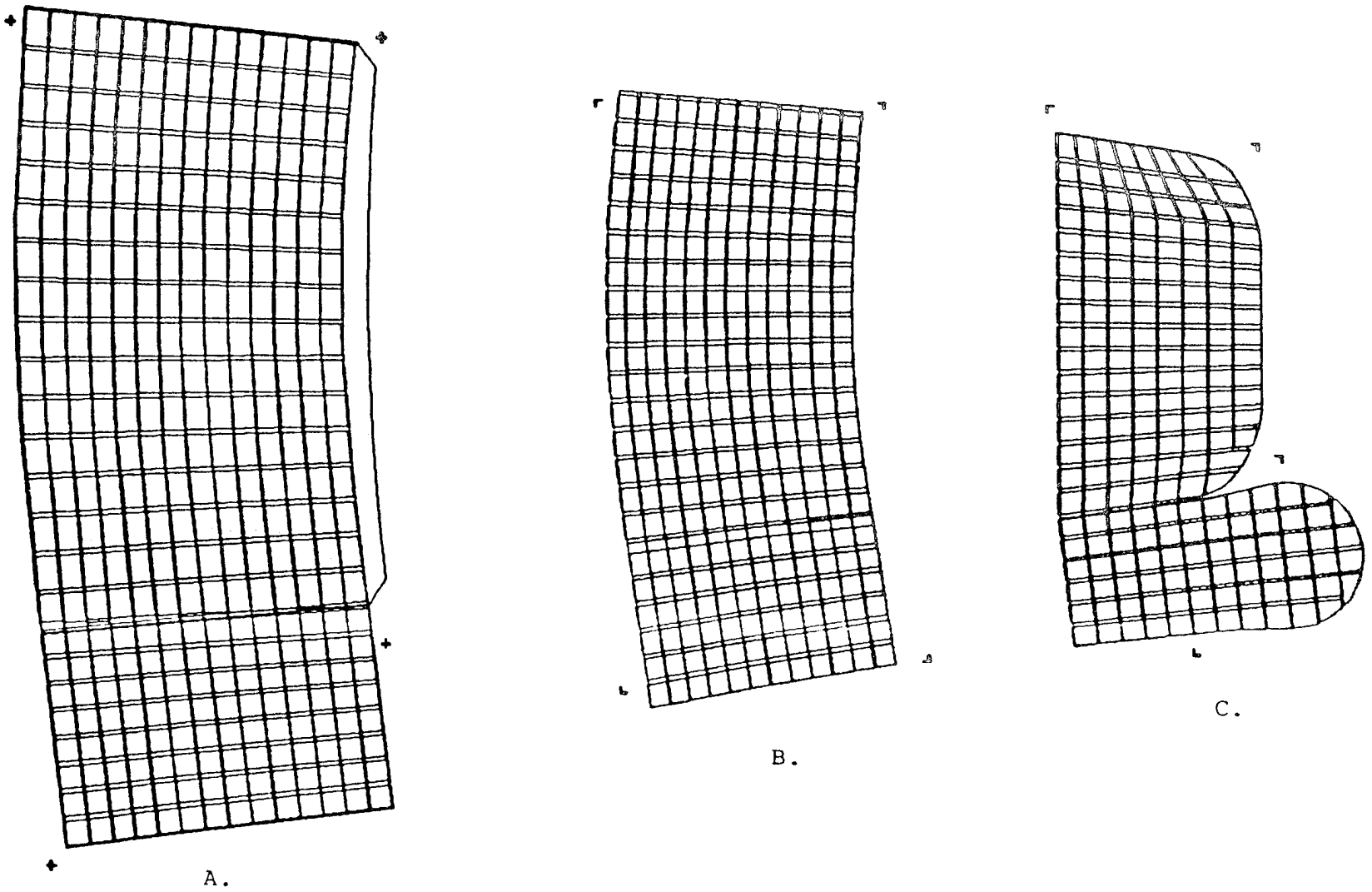

Figure 2. Tactile sensor arrays for the three finger segments

However, this would also mean that the pulser electronics used to excite the PVDF would now have to be capable of driving this additional capacitive load.

The two arrays comprising the finger-tip sensor were redesigned to incorporate the Kapton flex-circuit between the PVDF and the sensor cable, and the additional PVDF layer for transmitting. It was concluded that the arrays for this digit segment would be the most demanding because both arrays are curved, the radii of curvature are the smallest, and there is the least space available for connections. A major goal of the redesign was to have the new arrays be compatible with the existing flex circuit cables. The redesigned sensor had 120 elements rather than the original number of 196. Rows and columns were removed to provide space for bonding pads on the PVDF.

The sensors and interconnecting Kapton flex-circuit connectors for the remaining two digit segments were also redesigned in a similar fashion. These sensors also will use the existing sensor cables. Figure 3 shows a scale CAD drawing for all three tactile sensors (six tactile arrays).

Task 2--Tactile Array Patterns by Screening

Bonneville proposed investigating the application of electrically conductive inks onto unmetalized PVDF to form the array patterns. Since these inks are available in formulations that result in a high degree of flexibility, the problems with cracking of the PVDF metalization when it is folded should be eliminated.

Several small, single-element test transducers were fabricated using conductive ink electrodes. Examination after fabrication indicated no signs of cracking in the electrode material. These transducers were connected to a test box which pulsed the transducer and amplified the echo signal. The echo was displayed on an oscilloscope screen for analysis. The total thickness of the ink layers in the multiple layer transducers resulted in echo signals that were weak and consisted of several oscillatory cycles. These oscillations would make detection of time of flight unreliable. In light of this finding and the availability of the technique for making multi-layer sensors without folding, screening was not used to produce the array patterns.

Task 3--Sensor Coverings

Originally we had planned on using the rubber coverings supplied with the Utah/MIT Dextrous Hand (UMDH) as molds for the new coverings for the tactile sensors. However, these coverings were inaccurate since the sensor design differs from the finger geometry. Specifically, the planar, palmar surfaces were enlarged so that the planar tactile sensors would accommodate more elements.

Therefore, molds for the coverings were made by first constructing metal bases for the arrays. Next, 1/8" thick pieces of silicone rubber were bonded to the bases and trimmed to approximate the desired shape of the coverings. This mock-up was used to make a mold. After removing the mock-up from the mold, casting wax was melted and poured in the mold. The resulting wax form was augmented with wax, where necessary, and smoothed. A mold of this wax form was then made for use in casting the rubber sensor coverings.

Finger-tip

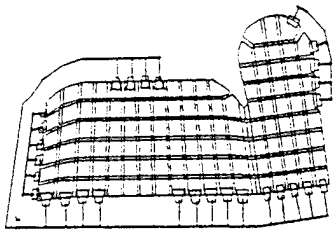

Elements: 0.060" x 0.080"
Spaces: 0.015"
Elements: 120

Middle

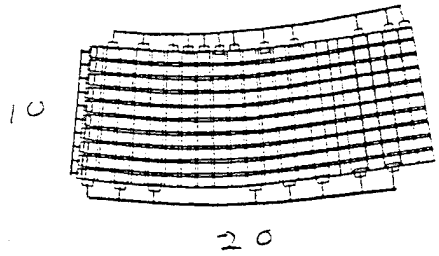

Elements: 0.060" x 0.070"
Spaces: 0.015"
Elements: 200

Proximal

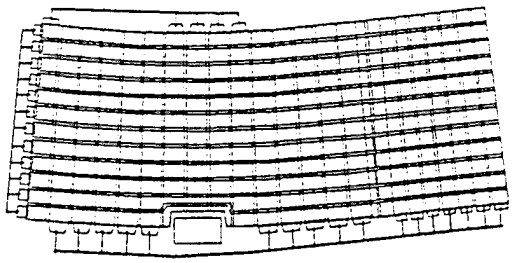

Elements: 0.065" x 0.070"
to
0.070" x 0.100"
Spaces: 0.015"
Elements: 264

Figure 3. Geometry of Redesigned Tactile Sensors

Early in the contract period Bonneville identified a three-component urethane elastomer system for use in the tactile sensor rubber coverings. Besides just the resin and catalyst of conventional two-component systems, a plasticizer agent was used for varying the durometer of the formulation. This urethane compound was to be formulated in different durometers in order to provide differing tactile sensitivity for various locations on the fingers. Bonneville had used this rubber material previously with good results. We also identified suitable mold-release agents for use in casting the sensor coverings.

However, it was discovered about half-way through the contract period that the plasticizer used in this rubber formulation slowly leached out of the rubber. The immediate consequence of this was that the Poron® layer used over the coverings to provide a known reflecting interface would be slowly degraded. A longer-term consequence was that the rubber would shrink and become harder. This was evident in a three-year-old tactile sensor pad made from this formulation. Several suggestions made by the manufacturer of the rubber either failed to solve the problem or presented new problems. Consequently, other urethane formulations were evaluated.

Bonneville Scientific began to investigate different urethane formulations to find those which had acceptable performance characteristics as well as compatibility with the Poron® layer and other sensor components. Rubber formulations compounded from ten types of urethanes and five types of plasticizers were evaluated for (in no particular order):

1. Ultrasonic attenuation
2. Modulus
3. Hysteresis
4. Bonding characteristics
5. Strength
6. Pot life
7. Ease of outgassing
8. Plasticizer leaching rate
9. Compatibility with Poron®

The best formulation found was based upon "Skinflex III". This compound had less ultrasonic attenuation, better adhesion to Kapton, and a leaching rate of the plasticizer of less than 1/20 of that for the old compound (Ciba-Geigy). The Skinflex compound also had an appropriately low modulus (stiffness), high strength, long pot-life and was easily outgassed. However, the hysteresis of Skinflex III was slightly higher.

Figure 4 shows the force versus displacement characteristics for the Skinflex and Ciba-Geigy rubbers. This is an extreme test in that the respective rubber samples were compressed to 50% of their original thickness, and the maximum compression was held for a two minute period. The Skinflex compound also satisfied the other requirements listed above.

However, near the end of the two-year Phase II contract period, it was discovered that old Skinflex III samples had greatly increased hysteresis characteristics. This was thought to be due to hydrolysis. After consulting with several experts in rubber chemistry, a second search for a suitable rubber focussed on silicone compounds.

Silicones had been excluded prior to this time because past experience showed that suitable, soft silicones were extremely weak and usually difficult to bond to. However, we

7.23.92 GBF

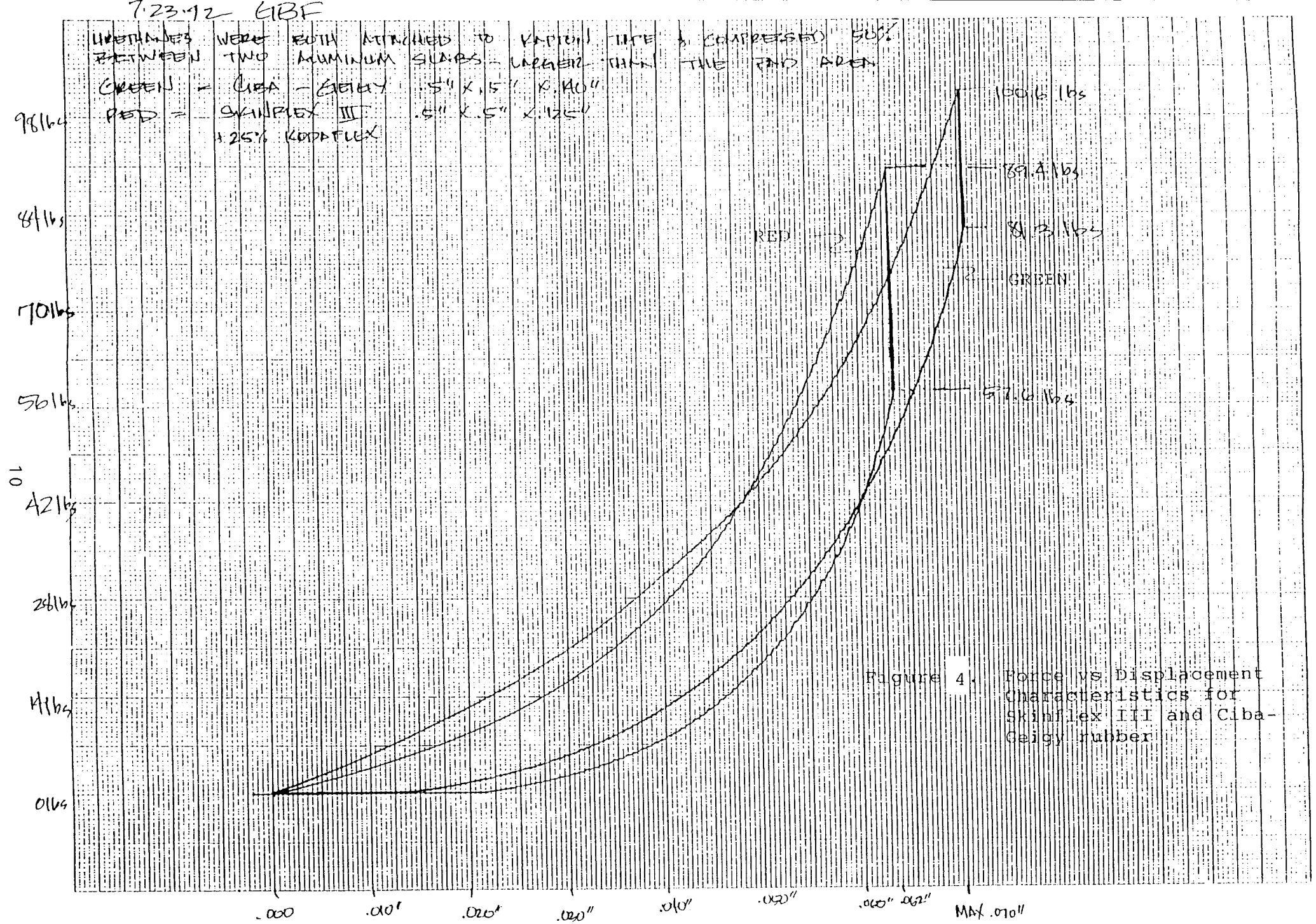

Figure 4. Force vs Displacement Characteristics for Skinflex III and Ciba-Geigy rubber

were informed that recent technical improvements have resulted in stronger rubbers, while adhesion promoters have strengthened bonds.

After more formulating and testing, we selected a silicone rubber from Huls America. This was a translucent silicone of appropriately low modulus and high tear strength which could be cast.

Two benefits resulted from selecting this silicone rubber for use in the tactile sensors. First, its speed-of-sound is about 2/3 that of the urethane's. Consequently, the force sensitivity of the sensor is 1 1/2 times that for urethane. We concluded that this increase in sensitivity made it unnecessary to consider different stiffness rubbers at different locations on the finger. The second advantage of this rubber will be discussed later.

During the sensor evaluation task conducted during the beginning of the contract extension, it was determined that a significant number of tactile elements had smaller than normal echoes because the outer surface of the sensor's rubber coverings were grossly nonparallel with the PVDF layers. We solved this problem by constructing the coverings out of flat rubber sheets of uniform thickness and then wrapping these sheets around the arrays.

Bonneville Scientific also decided to reduce the rubber covering thickness by 25% (from 1/8" to 3/32"). There were three reasons for this decision. First, in switching from a urethane compound to a silicone rubber formulation, the speed of sound decreased by about 1/3. This change in speed of sound translates into an increase in force sensitivity of about 50%. Therefore, the thinner rubber would still have a greater force sensitivity. Second, thinner rubber reduces the effects of angulation which occur when the outer rubber surface is nonparallel to the PVDF layers. Third, originally the overall thickness of the sensor covering was to be 1/8". The outer layer of Poron® had not been planned on. The Poron® adds another 1/32" to the thickness. Therefore, by reducing the rubber thickness by 1/32", the overall covering thickness remains at the original target value of 1/8".

The thinner rubber was characterized. Figures 5 and 6 show the compressive force versus rubber compression or displacement for this rubber. The rubber was compressed by 25% of its original thickness in both figures. In Figure 5 the material tester reversed direction (i.e., began to decrease the loading) several seconds after application of the peak load. In Figure 6 the peak force was left applied for 2 minutes. The greater hysteresis shown in Figure 6 is due to stress laxation in the rubber during this 2 minute holding period.

Although the rubber curves are nonlinear, a rather close approximation can be obtained by fitting two straight line segments to the curve--one for very low forces, the other for higher forces.

The speed of sound in the rubber coverings is about 1000 m/sec. This number must be used in converting the time-of-flight values obtained from the sensors to a corresponding distance (i.e., sensor rubber covering thickness). This distance is simply $d = 1/2\ ct$, where c is the speed of sound (1000 m/sec) and t is the time of flight. The corresponding force is calculated by multiplying the rubber stiffness (e.g., lbs/mm) times the change is covering thickness.

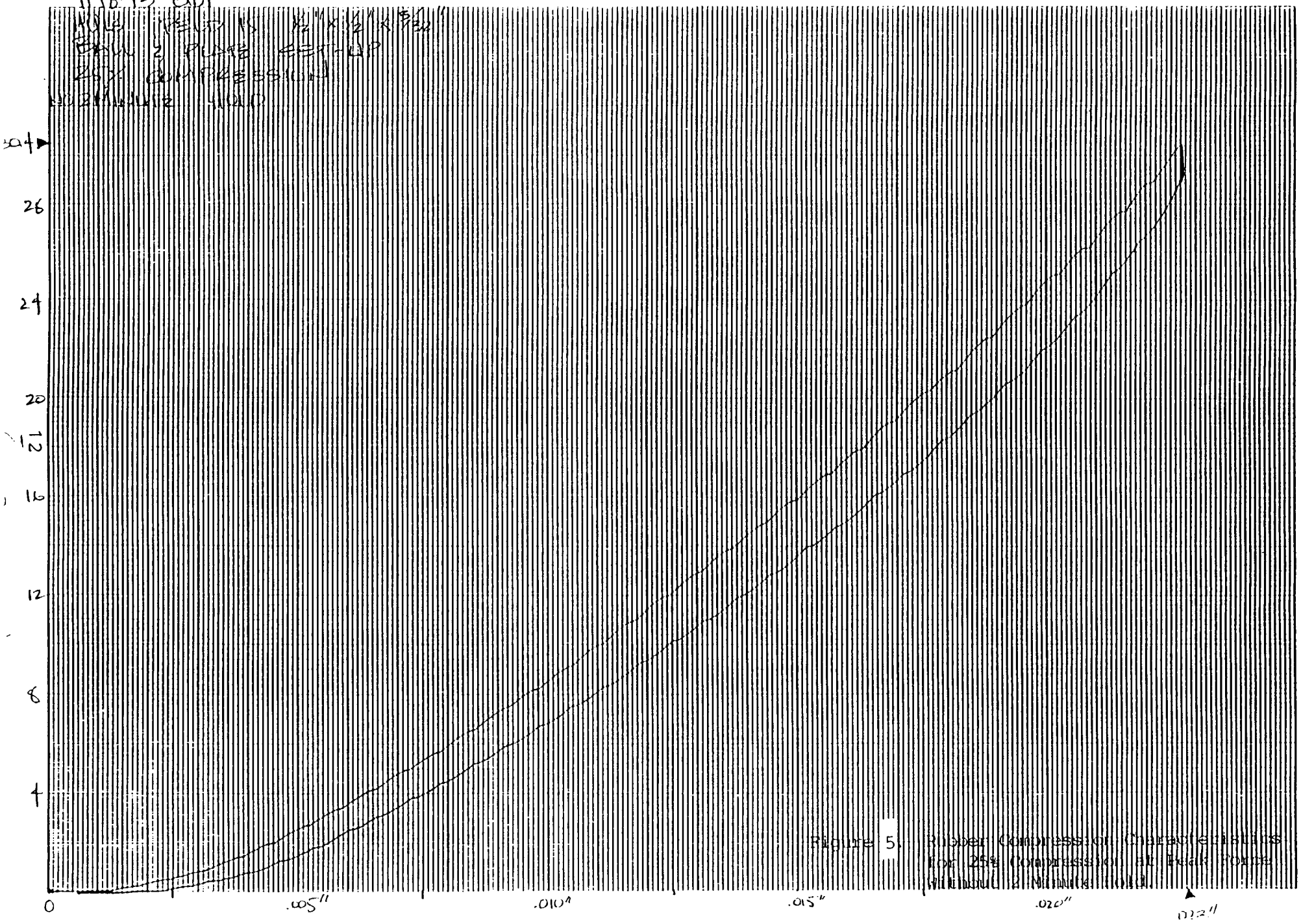

Figure 5. Rubber Compression Characteristics for 25% Compression at Peak Force without a Minute Hold

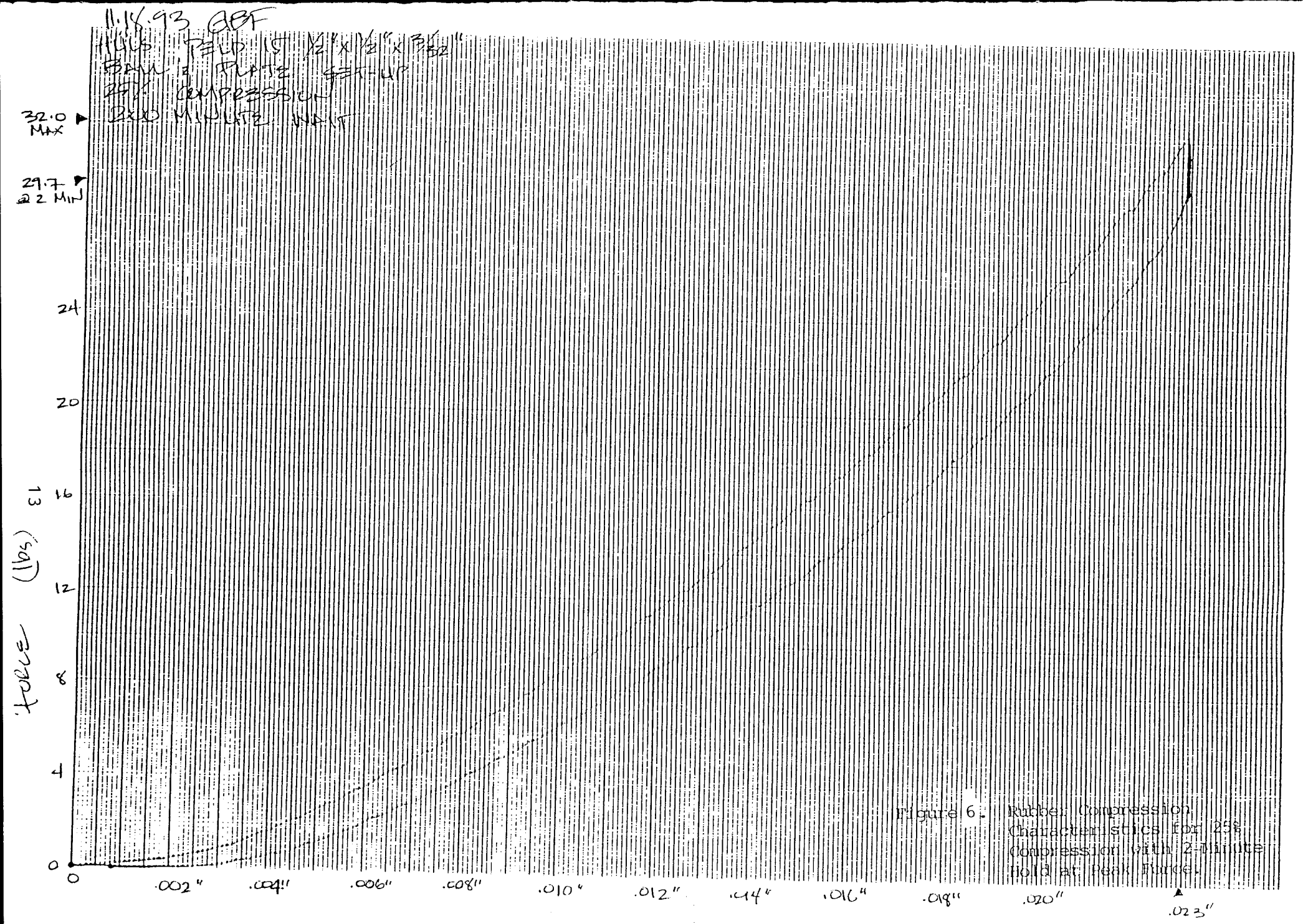

Figure 6 - Rubber Compression Characteristics for 25% Compression with 2-Minute Hold at Peak Force.

Task 4--Embedded Reflectors

We had planned to use a layer of Poron® on the outer surface of the tactile sensor's rubber covering instead of embedding reflectors within the rubber itself. Poron® is an excellent reflector of the tactile sensor's ultrasonic pulses because of the gases trapped in the foam cells. The large acoustic impedance mismatch between the sensor's rubber covering and the gas-filled cells results in almost total reflection at the interface.

This Poron® covering also has very attractive physical properties when used as a "skin" on a dexterous hand. Cutkosky [1987] has reported on the appropriateness of this and other materials for use on the gripping surfaces of robotic end-effectors. He found that Poron®, unlike most compliant materials, provides a surface with a relatively constant coefficient of friction (close to that of human skin) that changes little with normal (grasping) force or with contamination. Moreover, Poron® is rugged. Besides these advantages, the installation of Poron® is simpler than the proposed embedded reflectors. This covering is also easier to replace than the rubber sensor covering when it is damaged.

Tests were made on the compatibility of the Poron® layer with the original urethane sensor coverings. Twelve specimens of 1/8" thick urethane pieces were made up. These specimens were bonded to three different densities of Poron®. All twelve pieces were then placed in a heated chamber to accelerate possible chemical reactions. These compatibility tests indicated that the Poron® was degraded by the plasticizer used in formulating the original urethane compound chosen for use in the sensors. These tests were not conducted with the subsequent urethane rubber (Skinflex III) because of the very small amount of plasticizer used in that compound.

Poron® compatibility tests with the silicone rubber compound eventually used in the sensor coverings were not conducted. The reasons for this were that the silicone does not contain plasticizers, and that this particular formulation is manufactured for medical implants and, therefore, should be quite stable.

Under another research contract for developing a foot-shaped tactile sensor for monitoring foot-force, we have found that very thin sheets of suede-like leather provide the same function as the Poron® layer. The use of leather instead of Poron® is intriguing in that suede has a very low coefficient of friction at low forces (desirable during groping maneuvers), it is more resistant to damage from sharp edges, it could be slightly thinner; and being less compressible than Poron®, would not reduce force-sensitivity as much.

Ultimately, Poron® was not used on the tactile sensors. This decision was based upon a number of factors. We concluded that an easily-replaced material would be advantageous in that the coefficient of friction could be varied, depending upon the application, and the coverings could be replaced without risk of damaging the rubber coverings or the underlying transducer structures. A loosely knit fabric was chosen for the outer sensor covering. This fabric was in the form of "tights" for a child's doll. "Doll tights" were used since they can be purchased in lengths long enough to encase the entire digit and are easily stretched to aid in donning and doffing.

The fabric used in the tights is both thinner and produces significantly larger echoes than the Poron®. This results in greater force sensitivity and greater sensitivity in detecting points or edges contacting the tactile sensors.

However, since the fabric is not nearly as acoustically absorbent as the Poron®, moderately-large multiple echoes occur. These multiple echoes can result in erroneous detection in that when a new tactile element is pulsed, the second or third echo from the previously-pulsed element may be sufficiently for detection. This problem can be solved in the tactile sensing system by slowing down the scan rate. A more desirable solution would involve changing the multiplexing scheme used in the system by doubling the number of pulsers so that while the echoes are dying out in one bank of sensors, an element in the other bank is being excited.

The ultrasonic pulses emitted by the tactile sensors travel perpendicularly from the sensor elements with little or no dispersion. A consequence of this is that there will be insignificant amounts of ultrasonic energy at the edges of the sensors--where the wrap-around sensors meet the planar sensors. To provide tactile sensitivity in these regions, we thought of using small metallic reflectors between the outer and inner sensor coverings. These reflectors would have been narrow metal strips approximately the width of a tactile element and would extend from an element on the outside column of the planar array to the adjacent element on the wrap-around sensor.

However, it was decided not to implement this approach. It wasn't clear that this technique would solve the problem without introducing other problems or ambiguities. Instead, we felt that contact along an edge could be inferred by the increase in rubber thickness over tactile elements adjacent to the edge. Therefore, contact along the edges of the sensors can be detected through the use of appropriate software.

Task 5--Sensor Construction

A number of test transducers were fabricated and evaluated for determining the suitability of sensor substrate and backing materials. The sensor substrate is the material to which the PVDF is bonded. With some substrates, the ultrasonic energy radiated from the back surface of the PVDF will travel all the way through the substrate and into the material upon which the sensor is mounted (i.e., the backing or base material). When this happens, the echo signal is smaller since not all of the ultrasonic energy radiated by the sensor is in the forward direction; and, reverberation can occur, which can at least partially mask the echo signal. For these partially reflecting substrate materials, a backing material may be placed behind the substrate to redirect the backside radiation to the forward direction.

Previously, we determined that copper-coated Kapton film was a suitable substrate when the sensors needed to be curved. However, it was necessary to determine whether the new adhesiveless copper-clad Kapton material we intended to use for the miniature cables would also be suitable. Test transducers were fabricated using this material and our standard, ceramic plates, for substrates. These transducers were connected to the test box and the echo signals recorded.

Analysis of the echo signals showed that there was little difference in performance between the ceramic and the Kapton. Therefore, Kapton was chosen so that the substrate could be easily curved to fit the finger.

When ceramic is used as the sensor substrate, the composition of the backing material is unimportant. For Kapton substrates, a backing material is usually necessary for optimum

performance. Previous experiments have shown that even a very thin layer of a fibrous material that contains trapped gasses can isolate the effects of the backing material from the sensor. Two of these types of materials that we investigated were Tyvek and paper. Transducers were fabricated using Kapton for the substrate and both Tyvek and paper for the backing material and were connected to the test box to allow analysis of the echo signals.

When Tyvek was used for the backing material in the transducers, the Tyvek had a strong tendency to absorb the adhesive used to bond it to the substrate, thus reducing the amount of trapped gases in its fibers and therefore its effectiveness. The transducers using paper for the backing material also had a slight tendency to absorb the adhesive. However, we felt that Tyvek would be more consistent and stable than paper. Consequently, we developed a method for sealing the Tyvek to prevent penetration by the adhesive so that Tyvek could be used for the substrate.

PVDF having a new type of metalization was evaluated for use in the tactile sensors. Samples were obtained of PVDF having a base coat of copper covered with nickel. We currently use nickel over silver. The new metalization was recommended to us as being able to better withstand the creasing process when folded.

Several multilayer transducers were fabricated using this new type of metalization. Visual observations were made of the integrity of the metalization during the fabrication process. These transducers were connected to the test box so that the echo signal could be compared to those obtained from transducers using the prior metalization.

Evaluation of the PVDF with the nickel-over-copper metalization showed that this metalization was more prone to cracking near the creases. But the adhesion of the metal onto the PVDF was much greater than in the nickel-over-silver material. Ultrasonic echoes produced by transducers made from each type of metalization were comparable. However, later on it was discovered that the nickel was very brittle. Even fairly mild bending would shatter the nickel coating. Consequently, this material was not used in the sensors.

We also evaluated PVDF with a very thin layer of gold (about 100 Angstroms thick), which also was purported to be able to better withstand the stress in folding. This material was very sensitive to small amounts of tension. These small forces produced separations in the metalization. The metalization was also quite susceptible to fine scratches, which could interrupt the integrity of the electrode material. Therefore, there was no reason to consider using this material in the sensors.

Originally we planned on using several PVDF layers in the sensors. We estimated that four receiving layers of 9-micron thick PVDF and three transmitting layers of 28 micron film would be needed for the required sensitivity. However, we opted instead to substantially improve the sensitivity of the sensor electronics and increase the excitation voltage so that the number of layers in the arrays could be reduced. Fewer sensor layers would likely increase the reliability of the sensors.

The arrays for the middle segment of a finger were fabricated first. This array had two receiving layers of 9 micron thick PVDF and a single transmitting layer of 28 micron film. These arrays consist of 16 columns by 12 rows (192 elements) for the wrap-around array and 6 columns by 12 rows (72 elements for the array on the palmar surface of this finger segment. The patterns for these arrays are shown in Figure 2.

Our normal fabrication procedure was used in which the patterned metalization on the PVDF was gold plated. The gold plating immediately indicates any breaks in the thin metalization and also bridges small gaps and pin holes.

The array was connected to a miniature flex-circuit cable which was then connected to a test box. An 1/8" thick rubber pad was placed over the arrays, and each element was tested. This sensor had very good performance. All working elements produced strong echo signals. However, two rows were inadvertently connected together with conductive epoxy during fabrication. We concluded that the overall sensor design and construction procedures were satisfactory.

Next, PVDF was patterned and cables were made for the proximal and finger-tip segments.

The Air Force had expressed strong concern over any mechanical modification of the UMDH, such as drilling and tapping of holes as well as the permanent attachment of the sensors or related components. Moreover, the Air Force also stated the need to be able to remove the sensors from the fingers so that tendons could be replaced. It was also desired that the sensors would not be damaged by this removal process, and could be reinstalled afterwards.

In light of the above it was impossible for Bonneville to use the intended method for sensor fabrication when the Phase II proposal was written. The intended method was designed to eliminate flexing of the sensors or their connections to the integral flex-circuit cables. Flexing can damage the metalization on the PVDF and break the electrical connections. The original method was based upon constructing the sensor on the finger segment by building it up, layer by layer.

The Air Force preferred not to have Bonneville permanently fill in the gaps and spaces in the finger segments in order to provide a rigid base for the tactile sensors, as originally intended. Therefore, sensor bases had to be developed that could be easily removed from the fingers, yet rigid and secure enough to support the sensors.

The bases for the tactile sensors are thin metal forms that were placed around the three finger segments in order to bridge the various channels and gaps in the finger structures and provide a uniform mounting surface for the tactile sensor components. Trial bases were made out of 5 mil brass, 5 mil thick steel shim stock, and 7 mil thick stainless steel shim stock.

We began by using brass since this the easiest with which to work. Photo-etching of the brass bases was straight forward and they were easy to form into cylindrical shapes. The 5 mil brass was not nearly rigid enough, yet we felt that significantly thicker material would be too thick for the finger. Steel shim stock was tried next because of its strength, even though it was somewhat more difficult to etch. Five-mil steel shim stock was also found to be too flexible. Also, using steel for the bases is not ideal since it corrodes easily. Consequently, 7 mil stainless steel was tried next. This material was also satisfactorily etched and was found to be rigid enough to adequately support the sensors. The stainless steel was much springier than the mild steel and brass so that more secure fastening was required.

The outline of the bases was developed on our CAD system. From this outline photomasks were made so that the bases could be fabricated using photo-etching techniques. Their curvature was made by carefully wrapping the thin metal around cylindrical forms.

Designs for the bases were made which included tabs to fit in every possible recess in the digit in order to fix their position. Figure 7 shows the size and shape of the three bases before they are curved to fit the digit segment.

The base for the proximal and middle finger segment directly wrap around the metal structure of the finger. The metal base for the finger tip segment is the most complicated base. This base has compound curves and is soldered together. It also requires a molded plastic insert. A mold was designed and fabricated for this piece and epoxy casting compound was used in its fabrication.

Initial attempts to solder the seams in the finger-tip base resulted in solder accumulating inside the base. This accumulation prevented the base from fitting on the plastic form. To prevent this accumulation from forming, a ceramic form was made which closely fit the interior of the base. This solved the accumulation problem.

Two options were apparent for mounting the sensor bases on the finger structure. These options were the use of adhesives to bond the base to the finger and the use of screws to secure the base to the finger at different locations. With adhesives, the sensor would most likely be destroyed during removal of the base. Furthermore, adhesive residue would probably remain on the finger when the base was removed. The alternative of using machine screws to secure the bases to the finger requires drilling and tapping holes in the finger structure and the use of tabs or flanges on the bases to receive the screws.

The method finally chosen was to make both the main body of the base and its tabs very close fitting on the digits. However, the base for the finger-tip segment is secured to the digit by a machine screw threaded into a pre-existing tapped hole.

We explored ways for holding the bases together in their cylindrical form after being placed around the finger segment. These methods included soldering, adhesive bonding, internal taping and external taping. The method finally selected was to design the bases with an overlapping region, and bond the overlap together with double-sided tape.

A new conductive epoxy adhesive for making connections between the PVDF electrodes and the flex-circuit cables was evaluated. This adhesive had been used for making connections between the PVDF electrodes and the flex-circuit cables in tactile sensors for other projects with excellent results. By remaining somewhat flexible after curing and having greater adhesion than the adhesive which we intended to use, the tactile sensors are expected to be more reliable. Another important advantage in using this new epoxy was that it made it more feasible to assemble most of the sensor before installation on the hand.

The tactile sensors, minus the bases and rubber coverings, were assembled (without connecting the edges together to form a cylinder) over a curved form. After assembly, a temporary rubber covering was applied and the sensor was operated. Problems with sensor operation are more easily corrected at this stage than after installation on the digit. Once proper operation was verified, the sensors were installed on the digits.

Task 6--Sensor Installation

Sensor installation on the hand began by installing the metal bases on the three finger segments. The finger-tip base was simply installed by securing the plastic insert to the finger with a machine screw, covering its outer surface with a weak adhesive, then positioning the metal base over the insert. The other two bases were installed by positioning them over the

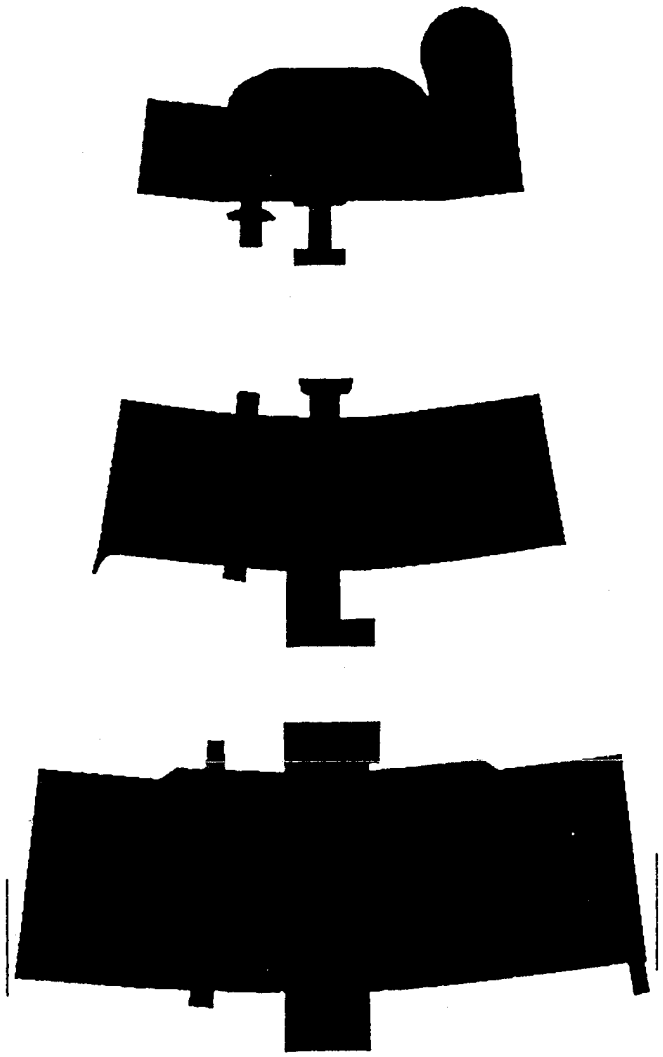

FIGURE 7. Shape of metal bases for the tactile sensors
Scale 1:1

segments with the tabs in the grooves and closing the bases into a cylinder, then using double-sided tape to secure them in a cylindrical shape. The bases were next covered with Kapton tape to cover sharp edges and to insulate the surface.

After mounting the metal bases on the fingers of the hand and testing the arrays on the test fixture, the arrays were installed on the finger segments. Before the arrays were applied over the bases, a thin layer of contact adhesive was applied to the Kapton tape covering the bases. Next, the arrays were carefully placed in position and pressed against the contact adhesive. A layer of Kapton tape was then applied over the arrays to further secure and protect them.

Initially, we felt that the rubber coverings could be made in one piece and could probably be expanded and placed around the finger without being cut. However, we expected that it would have been difficult to uniformly bond the coverings to the sensor with no gases (air) being left trapped between the sensor and the inner surface of the covering. Gas pockets would prevent the passage of the tactile sensor's ultrasonic signal into the rubber. Consequently, it was anticipated that the coverings would be slit before they were mounted on the finger. Slitting would facilitate the controlled application of the covering to the array and the careful expression of excess adhesive from the interface region. Once in position, the slit in the covering would be sealed with adhesive.

However, it wasn't necessary to slit the molded rubber coverings. The arrays were covered with a thin coat of silicone adhesive. Then the coverings were stretched and positioned over the arrays. The translucency of the rubber allowed the trapped air bubbles to be visualized and, therefore, easily expressed.

The redesigned sensors fabricated during the contract extension period were mounted on the original metal bases installed on the hand. Sensors were installed in the same fashion as previously described. The rubber coverings were comprised of strips of rubber having uniform thickness. These were positioned and then bonded to the sensors. Sensors and rubber coverings were installed on all four digit tips. Sensors for the medial and proximal digit segments were only installed on the thumb and index finger. Resources did not allow the complete fabrication and installation of these sensors on the other two digits.

Bonneville Scientific deviated from the proposed prioritized order for installing and wiring the sensors on the hand. This order is stated under the "Contract Extension" section of this report. The reason for this deviation is due to the architecture of the sensor electronics subsystem.

All the arrays for each digit are multiplexed by one circuit board. Consequently, all the sensor cables exiting a digit are bundled together with a common shield and routed to the electronics box containing the multiplexing and pulsing circuit boards. Therefore, the operation of all four finger-tip sensors would require four wire bundles terminating at four multiplexing boards. On the other hand, all six sensors on two digits would only require two wire bundles and two multiplexer boards.

Dwindling resources and the difficulty in working in the confined quarters of the electronics box (described later), forced us to take the latter approach and fully install all six sensors on the thumb and index finger. However, the finger-tip tactile sensors are installed on

the remaining two digits and could be wired to additional multiplexers in order to be made functional.

Task 7--Sensor Evaluation

The sensors were tested just prior to their installation on the hand by using the test fixture (which is described later under Objective 3). After installation, the sensor cables were connected to the hand's sensor system electronics, rather than the test fixture for re-evaluation of sensor performance.

The test fixture was not used at this point for two reasons. The first reason stems from the fact that since the test fixture was never a budgeted part of this contract, the funds were not available to fully develop it so that it could be used routinely. Each time it was used, careful attention had to be paid to the shielding and grounding of both the adapter cable connecting the fixture to the sensor leads and the sensor leads themselves. This process was further complicated by the rather limited access to the sensor cables because of the hand structures. The second reason was that it was Bonneville's opinion that the installation procedure was gentle enough not to cause significant damage to the sensors.

The above two reasons were influenced by the short time remaining in the Phase II contract (i.e., the decision not to use the test fixture at this point was a calculated risk).

After installation of the arrays on the digits and the installation of the rubber coverings over the arrays, the flex-circuit cable leads exiting the fingers were soldered to miniature cables which terminated in the box containing the pulser and multiplexing electronics.

The cables exiting the electronics box were attached to the connectors on the wire-wrap board in the VME card cage. This board contained the remainder of the sensor electronics and the port to the single-board computer, or SBC (68020 microprocessor).

The tactile sensor system was energized and the elements were scanned. The time-of-flight values displayed indicated that echo signals were not being consistently detected. However, there was no way of determining from the time-of-flight values whether the problem was with the sensors, the sensor electronics, the computer(s), the software, or was just a matter of adjustment.

Trouble shooting the tactile sensor system was complicated by the high noise level in the analog echo signal lines coming from the tactile sensors. This high noise level was due to at least two factors. First, optimum placement of ground connections and optimum installation of shielding hadn't been determined yet. Second, the existing shielding and grounding of the shields had to be disrupted in order to make the test measurements.

Connections to the proximal array on the thumb were removed so that a test box with pulsing and receiving electronics could be directly connected to the array leads. This approach isolated the array from the hand's sensor electronics.

The evaluation process consisted of connecting the test box leads to the appropriate sensor cable leads, locating the tactile element, and palpating the rubber covering while viewing the echo signal on the oscilloscope. This process was very time-consuming.

Measurements were made on a total 72 tactile elements using this procedure. All of these measurements were confined to the wrap-around portion of the sensor on the proximal segment of the thumb.

Over a period of about six hours it was possible to test 72 out of the 336 elements in the proximal array. This represents only about 2% of the 3200 tactile elements on the hand. Time was not available to proceed further.

Out of the 72 elements tested, 36 elements were "dead". Dead is defined as either the element was not functioning, or the echo signal could not be made to increase sufficiently for reliable detection by palpating the rubber covering. Out of the 36 dead elements, 11 of them had echoes that were too weak. Out of the remaining 25 that weren't functioning, it is probable that 12 of them were due to a broken connection between the bonding pads on the PVDF and the sensor cable. Another eight of these were probably due to breaks in the metalization on the PVDF.

The other 36 elements either normally had very strong echoes, or their echoes could be made sufficiently strong by palpating the rubber. Therefore, it is quite likely that all of these 36 elements would operate normally if the sensor's rubber covering were changed so that the outer surface of the rubber were more parallel to the PVDF surface. We expect that in making the molds for the rubber coverings, not enough attention was paid to this important detail.

Since one has access to the connections between the PVDF and the flex-circuit cable when the sensors are removed, it may be possible to repair these connections. Therefore, it is possible that function could be restored to 12 elements. The eight bad elements thought to be due to breaks in the PVDF metalization can potentially be fixed because the indicated breaks would be on the outer surface of the PVDF, which is accessible after removing the rubber covering and protective layer of kapton tape.

In light of the above, it may have been possible to restore function to 20 out of the 36 dead elements. Whether any more than this number of tested elements could have been fixed was unknown at the time since the nature of the problem was not known.

Sensor Tests and Results. The first task under the contract extension was to make the test fixture easier to use and reduce its noise pick-up so that it could be used to test the performance of the tactile sensors installed on the UMDH. This was achieved primarily through careful shielding and grounding of the shields covering the flex-circuit adaptor cables. The three adaptor cables, one for each of the three different digit segment sensors, make connection between the sensor electronics module and the cables on the tactile sensors.

Once these changes were made, the test fixture was used to display on a personal computer screen the tactile image produced by an array so that non-functional elements could be quickly identified. The test fixture, through an appropriate software command, also allowed a particular element to be repetitively addressed so that an oscilloscope could be used for display of the echo signal to allow analysis of its size, shape, and noise level.

All 3200 tactile elements were functionally tested with the test fixture. The overall result of this test was that only 16% of the tactile elements (taxels) had acceptably high echo signals. A value of 2.0 volts peak-to-peak was rather arbitrarily chosen as an acceptable echo amplitude level. On the average, echoes of this amplitude would have a 10:1 signal-to-noise-ratio.

It was observed that many of the elements near the edges off the arrays had weak echoes which could be made substantially larger by manipulating the rubber pad. This, was due to the exposed surface of the rubber being grossly nonparallel with the PVDF surface.

All the echoes from the arrays on digit two (the index finger) of the hand were "characterized". That is, the echo signal was observed and deviations from normal amplitude, shape, timing, noise, as well as whether or not it was intermittent were noted.

Capacitance measurements were made on every sensor row and column. Very low capacitance indicates breaks either in the connections between the sensor cables and the PVDF or at the very beginning of a row or column on the PVDF. This was usually confirmed by the echo amplitude measurements in that the entire row or column would be "dead". Higher, but still less than normal, capacitance values indicate breaks across a row or column of the PVDF metalization.

The location of the break is usually determined from the echo measurements. The reason that the location of the breaks aren't always indicated by the amplitude measurements is that many of the breaks were intermittent. If fact one row whose measured capacitance was virtually zero, had echo signals of very high amplitude. This was traced to an intermittent break in the metalization. In fact, we saw no reason to perform any statistical analysis on the test data because we knew that many of the measurements would not be reproducible because of intermittent contacts.

The most relevant test data for the arrays are given in Appendix 2.

These test results were consistent with our initial suspicions at the end of the 24-month Phase II period. That is, failures could be attributed to broken connections to the PVDF metalization and to breaks in the PVDF row and column metalization. Also, reduced echoes could be attributed to a nonparallel rubber surface or to defects in the manufacture of the sensor. In other words, nothing was seen which would suggest new failure modes.

Autopsy Results. Several arrays were dissected while still on the hand in order to examine indicated failure locations and confirm or deny our suppositions of the cause of failure. In general, there were numerous breaks in the PVDF and its metalization in the vicinity where the PVDF was folded under the array in order to connect with the flex-circuit cable. Some of these breaks resulted in clearly open circuits, others made intermittent contact.

Microscopic examination showed that there were scratches across some of the transmitting row electrodes on the outer PVDF layer. Some of these scratches were sufficiently long and deep to interrupt the continuity of the electrode. Since the transmitting rows are unprotected until the sensor is attached to the digit and covered with Kapton tape, these scratches can occur during handling. No scratches were seen in the metalization of any of the underlying receiving layers. Also, no breaks in the connections between cables and PVDF were noted.

In some arrays, repairs were effected by covering indicated breaks with conductive epoxy. In every case where this was done, capacitance values increased to within the normal range and previously nonfunctional elements began working.

In light of these findings, the tactile arrays were redesigned to reduce or eliminate these identified sources of failure. The new design is described under Task 1 of this objective.

Performance of Redesigned Sensors. The redesigned sensor and the interconnecting flex-circuit were fabricated and connected to the old flex-circuit sensor cable. When this new sensor was first made it was left flat and covered with a flat sheet of 3/32" silicone rubber. The sensor cable was connected to the test fixture and operated by the PC. Figure 8 shows a tactile image of a round rod obtained from the flat finger-tip arrays. The row and column voids shown in the display are the result of a quick "hack" of the software for displaying the original finger-tip array in order to make it more compatible with the redesigned sensor.

Echo amplitude measurements were made on all the elements of the redesigned sensor. All but four elements had echo amplitudes of 2.0 volts or greater. The smallest echo differed from 2.0 volts by less than 10%. After the above measurements were made, the sensor was wrapped around and attached to the metal sensor base for the finger-tip. Molds were made, and two uniformly thick planar pieces of rubber were fabricated with the appropriate shape for this sensor. These two pieces of rubber were then applied to the PVDF and temporarily secured by double-sided tape. Figure 9 shows a tactile image obtained from the curved sensor. To obtain this image, the sensor was grasped laterally and the palmar array pressed against the laboratory bench top.

Echo amplitude measurements after mounting the arrays on the metal base showed that now six elements had echo signal amplitudes of less than 2.0 volts. The two new elements with low amplitude were adjacent to each other and at least partially covered by two rather irregular layers of tape which was used to secure the rubber pieces to the arrays. It was thought that it was the tape which was the cause of the decreased amplitude.

Overall, this redesigned sensor performed almost flawlessly. Only 5% of the elements had slightly less than the target amplitude. It should be noted that echo amplitudes were measured on the old sensors without the Poron® covering. Measurements on the redesigned sensor included the effects of the Poron®. Even though the Poron® reduces echo amplitude by about 20%, the echoes from the redesigned sensor were typically significantly greater. This is due to the additional PVDF transmitting layer.

Objective 2--Sensor Interconnect and Cable Routing

Task 1--Measure Relevant Finger Dimensions

For cabling purposes, approximate finger dimensions were measured from assembly drawings for the finger. Later, when the actual finger was available to us, more accurate measurements were made. These were entered into our CAD system. This task was straight forward and presented no significant problems

Task 2--Determine Cable Geometry and Dimensions

As originally proposed, one sensor cable would be interconnected to all six arrays on the three digit segments. With this approach, the number of leads and cables within a digit is minimized. Based upon the measurements made in Task 1 of this objective, preliminary cable layout was made.

Since with the original approach all the arrays on a digit would be physically connected together, repair or replacement of an array would be very difficult without damaging the interconnecting cable and, therefore, the operation of the other arrays on the

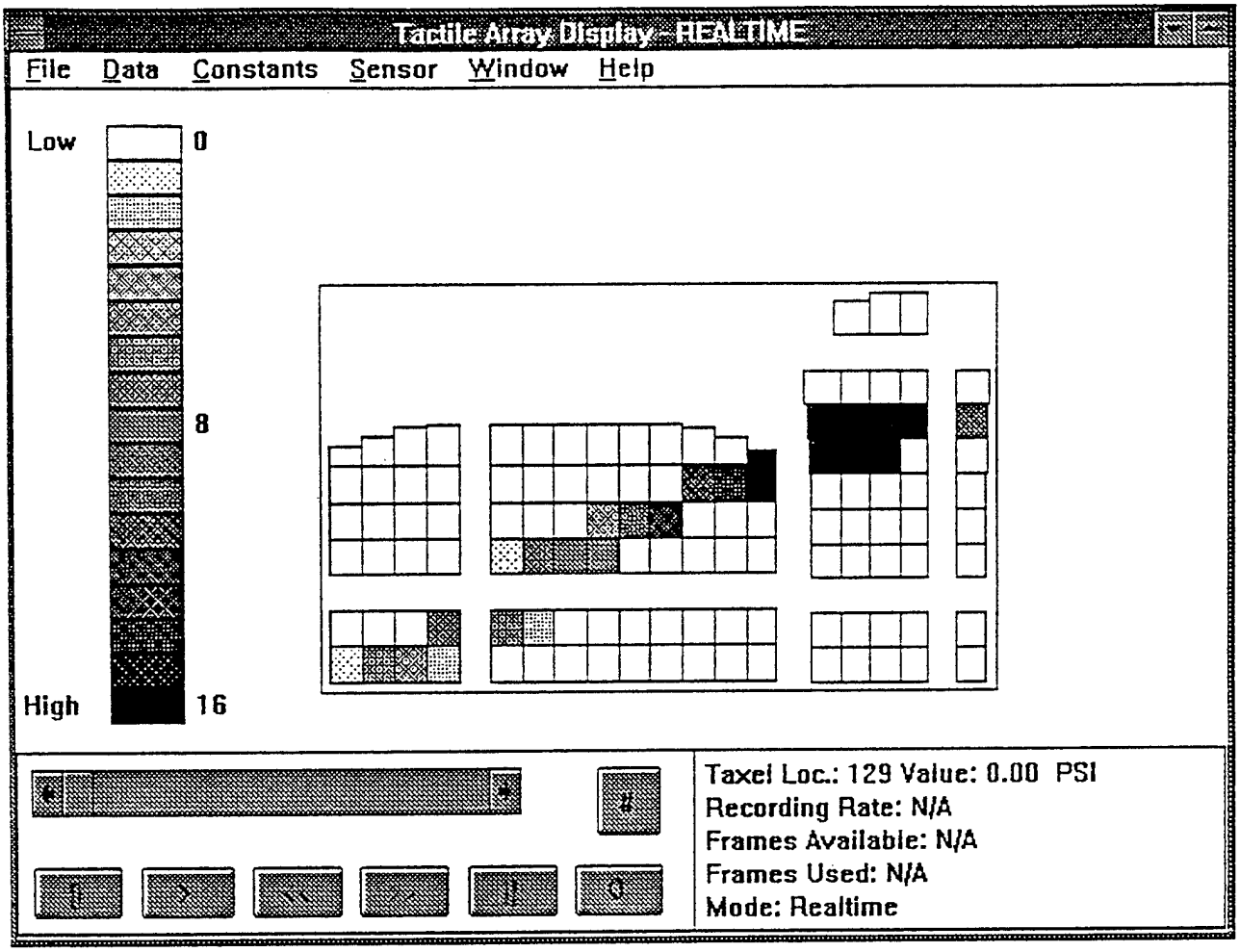

Figure 8. Tactile Image of a Round Bar Placed Across the Flat Redesigned Finger-Tip Sensor.

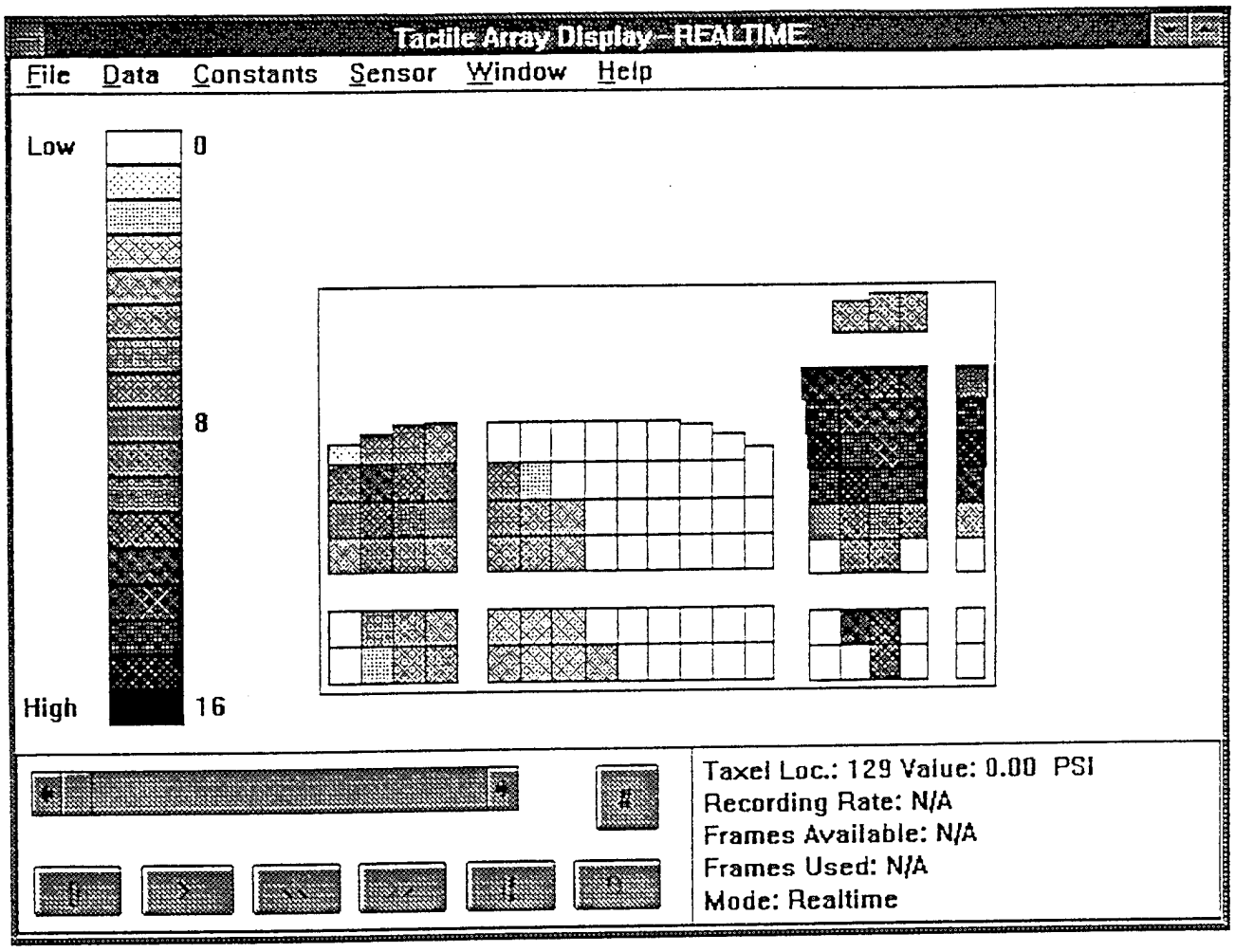

Figure 9. Tactile Image Produced by Laterally Grasping the Curved Redesigned Sensor and Pressing the Palmar Array Against the Lab Bench Top.

digit. With the Air Force's concern about not being able to repair or replace damaged sensors in mind, we simplified the cabling design. The two arrays on each finger segment have one cable running back to the sensor junction box. Repair is thus potentially simplified and more practical. Another reason for having separate cables for the sensors on each finger segment is to increase array element sensitivity by not having receiving columns of an array on one finger segment connected to array columns on another segment. This change in cabling does, however, greatly increase the number of leads exiting the digit and the number of connections required, and also triples the number of cables.

Task 3--Determine Cable Routing

Because the arrays on each of the three segments of a digit are no longer interconnected, it was now possible to route the cables from the finger-tip segment between the sensor and digit structures of the other two segments. Similarly, the cable for the middle digit segment could now run under the sensor on the proximal finger segment. Moreover, a small amount of tension applied to the proximal ends of the cables would prevent the formation of cable loops at the digit joints. Consequently, the cables would only experience minimal flexing and there would be no loops to get caught on objects during use of the hand. Existing channels in the finger structure were sufficiently wide to accommodate the sensor cables except for the finger-tip arrays. The channel on top of the finger-tip segment was notched in order for the cable to fit within this recess.

Task 4--Determine Method for Cable Flexing

The purpose of this task was to develop a suitable method to allow the sensor cables to flex at the finger joints during flexion and extension of the finger. This was an important issue with the originally-proposed interconnected arrays. By having a separate cable for each pair of arrays on a digit segment and by routing the cables underneath the sensors, this sort of cable flexing does not occur.

Task 5--Test Flex Method

There was no "method" to test since the small amount of cable flexing which occurs in the vicinity of the finger joints is insufficient to cause loops to form. The cables flex slightly, with a large radius of curvature, at the back of the hand. This amount of flexing is quite benign.

Task 6--Design Cables

We developed one double-sided cable for the arrays on each digit segment. Leads for the transmitting elements were on one side, and the receiving leads on the other side. Figure 10 shows the receiving leads on one side of these cables for the three segments. A similar arrangement was used for the transmitting leads that are on the opposite side of the cables.

Figure 11 shows a photocopy of the photomasks used in fabricating the cable for the proximal digit segment array. The upper portion of Figure 11 shows the copper conductor pattern for the 14 transmitting rows of the array. The corresponding pattern for the 24 receiving columns is shown below it. The photocopier lacked the resolution to show the individual conductors in the cable. In the receiving element cable, the traces are 5 mils

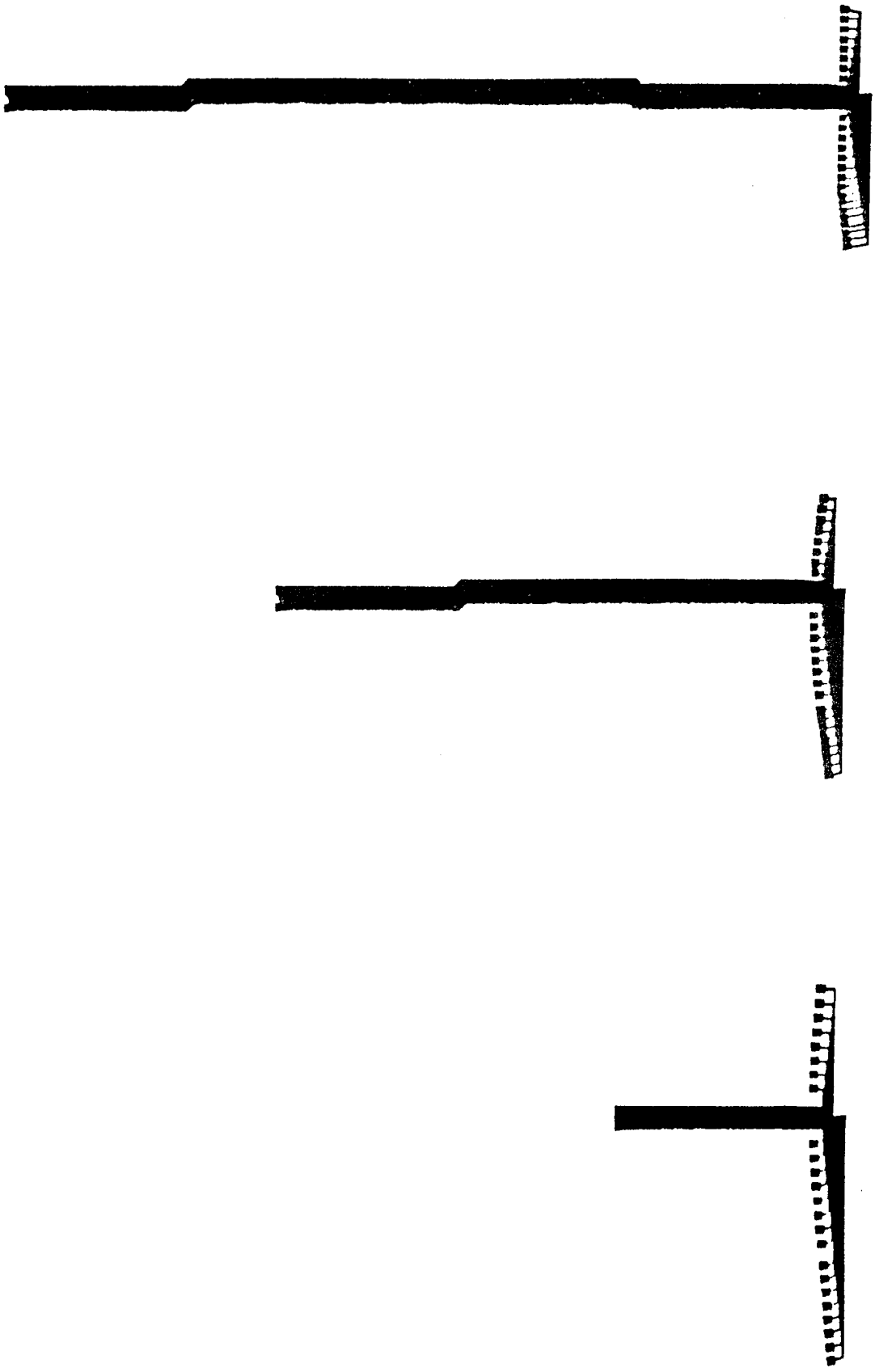

Figure 10. Cables for the three finger segments.
(Only receiving leads shown)

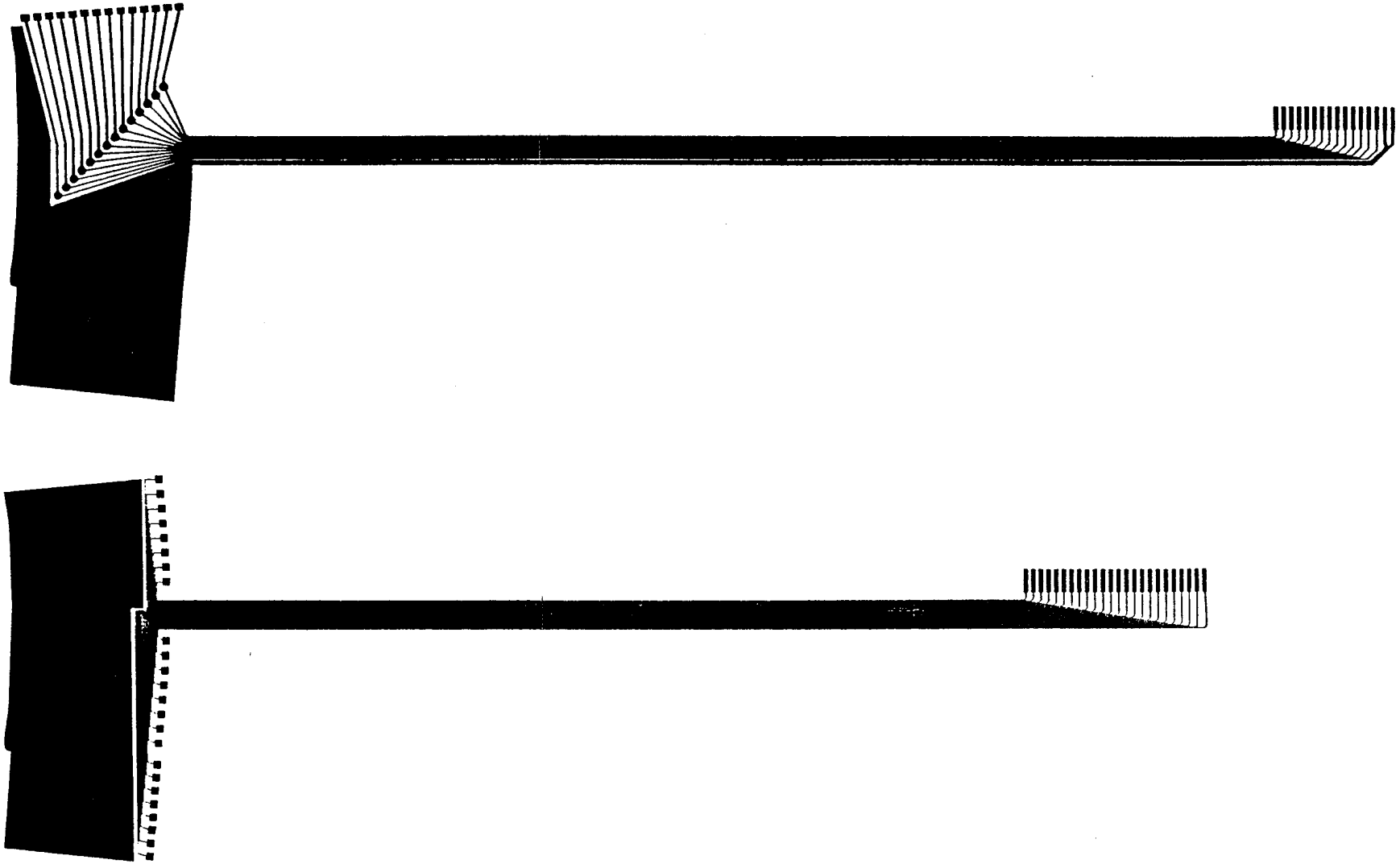

Figure 11. Cable photomask for proximal segment arrays

wide with 3 mil spaces between them. For the transmitting elements, the traces are 8 mils with 4 mil spaces. The transmitting cable also carries a wide ground conductor that makes contact with two of the conductors in the edge connector at the right end of the cable.

During the contract extension when new tactile sensor arrays were made, they were designed to be compatible with the old sensor cables. Consequently, the old cables were used with the new arrays.

Task 7--Fabricate Cables

Initially, the cable design described in Task 6 for the middle digit segment was fabricated and connected to the sensor. Cable integrity was tested before connecting it to the PVDF.

The cable for the proximal array was fabricated using the photomasks shown in Figure 11. We altered our cable fabrication procedure by using a heated-roll laminator to apply a thin film of photoresist to the copper-coated Kapton flex-circuit material. This technique eliminated the pin holes in the photoresist commonly experienced with spinning on liquid resist and the resulting laborious touch-up process. It significantly improved cable quality.

Initially we felt that the sensor cables would be too thick if Kapton-film insulating layers were laminated over the traces of the flex-circuit cabling. Therefore, we developed an alternative insulation process that used a liquid polyimide material. The liquid polyimide bonds well to the cable and levels to a uniform thickness. Use of this insulating material significantly reduced cable thickness and thereby improved their flexibility as well as allowed them to pass through the digit structures more freely. However, we discovered that the polyimide would wear through after a period of time when it rubbed against another cable. Consequently, instead Kapton was laminated to both sides of the miniature cables for insulation.

In order to electrically shield the cable leads without a substantial increase in their thickness, we planned on using a thin conductive polymer coating. The efficacy of this type of shield was tested. We fabricated a miniature cable for connecting a tactile sensor to the sensor's electronics. This cable was first wrapped with metal foil to shield it, and then the noise level was measured. The metal foil was removed and the cable was covered with the conductive polymer. After reconnecting the cable, the noise level was again measured. Measured noise levels were the same for this material as they were when metal foil was surrounding the cable.

Although the conductive polymer coating shielded well, there were questions about its durability. We then became aware of a newly developed shielding material. This was silver-coated rip-stop nylon. This material was used on each side of the cables for shielding and a final layer of Kapton was applied for protection.

After the shielding test mentioned above, one set of the three cables required for one finger was fabricated. The resulting sensor cables contained five layers of material and were about 0.015" thick.

One bottleneck in cable fabrication was the need to print out the cable artwork at a scale of 10:1 on 8 1/2" x 11" sheets of paper, and to carefully align these sheets and then tape them in place. Ten-to-one scale is needed for high resolution on the laser-jet printer.

Therefore, the artwork shown in Figure 11 starts out being almost eight feet long. During this contract we were able to up-date and modify our CAD system software to allow us to have the cable designs photoplotted by an outside vendor. The outside photoplots have greatly decreased the time required for photomask generation and has resulted in improved cable quality.

Objective 3--Tactile Sensor System Electronics

Introduction

The development of the tactile sensor system electronics was delayed in order not to duplicate effort. Bonneville had another project, for the Veterans Administration, in which the current tactile sensor system electronics needed to be improved. We chose to wait until these improvements were established before developing the electronics for the UMDH tactile sensors so that these improvements could also be used here, rather than duplicating obsolete electronics for the hand.

Task 1--Increase Addressing Capability

This task was relevant to the dual microprocessor system originally proposed for this Phase II project. It became trivial when the contract was changed to require a new microprocessor system to be developed.

Task 2--Receiving Multiplexing

Bonneville Scientific originally proposed interconnecting each of the tactile arrays on the three-digit segments. This interconnection resulted in each digit having 24 leads for the transmitting rows and 24 leads for the receiving columns. In response to the Air Force's concerns about the difficulty in replacing or repairing the arrays on one segment without damaging the interconnected arrays, Bonneville Scientific altered the cabling layout so that the arrays on each segment have their own leads which pass through the digit structure and terminate at a junction box. As a result of this, each digit had 68 rather than 24 leads for the receiving columns in the arrays. This increase in the number of leads presents more multiplexing possibilities, some of which can be exploited to improve sensor performance.

The scheme for multiplexing the receiving columns of the tactile sensors is shown for one digit in Figure 12. This scheme was chosen for the following reasons:

1. Cable routing to the junction box is neat and simplified since the three cables exiting a digit terminate at the same location.
2. Four identical multiplexing circuit boards are used, one for each digit.
3. Tactile sensor sensitivity is maximized since no receiving columns are connected together.
4. Different gains can be used for the planar and the wrap-around arrays.

The main disadvantage of this scheme is that it uses more switching FET's than would otherwise be necessary. This not only increases the number of electronic components required, but also the signal loss due to more levels of multiplexing.

The analog echo signal passes through three FET switches. Since these switches have significant "on" resistance (about 65 ohms, maximum), a small experiment was conducted to determine signal loss. A printed circuit board having three FET switch stages in series was

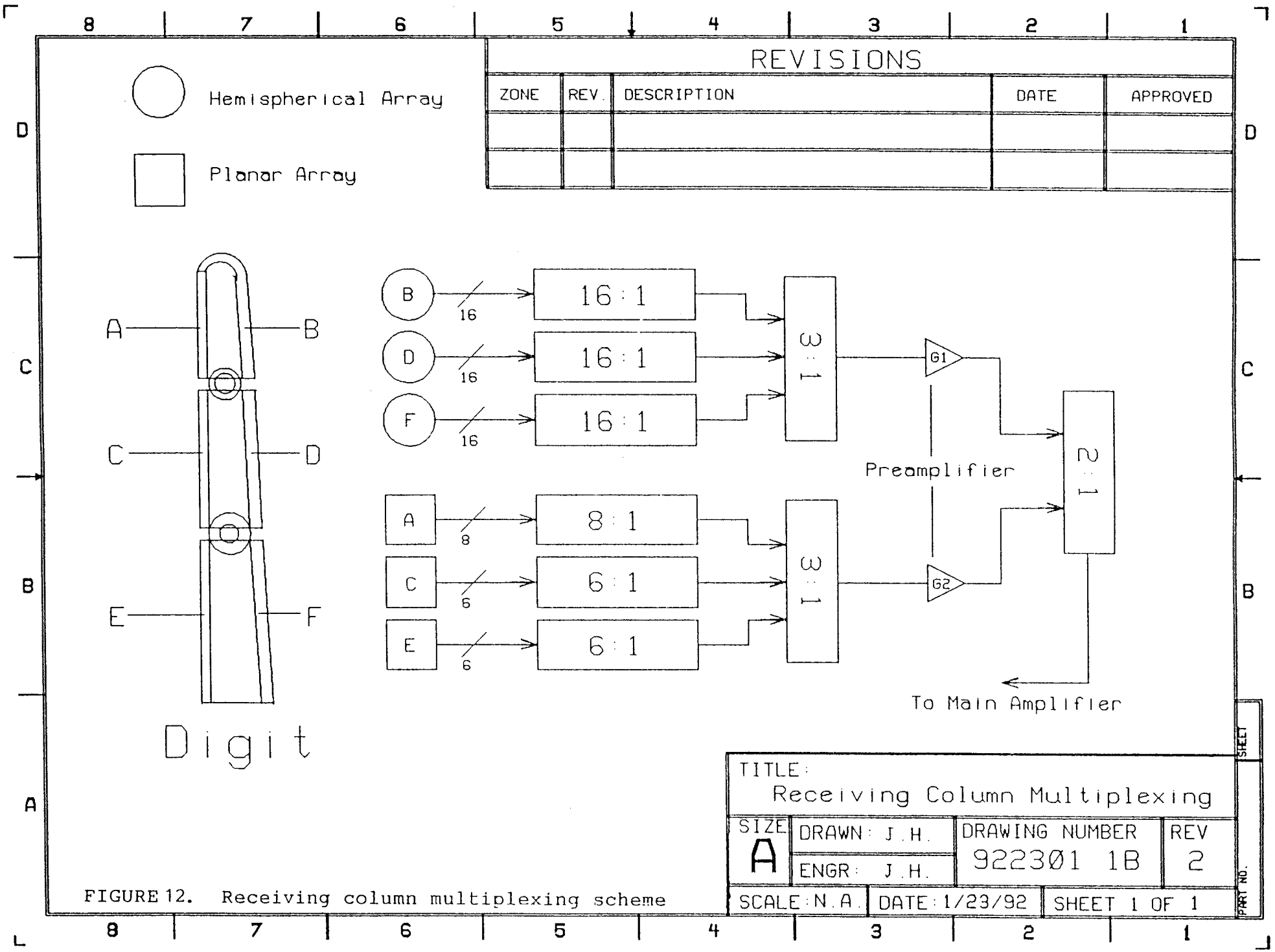

FIGURE 12. Receiving column multiplexing scheme

designed and fabricated, and signal loss was measured. Test results showed that the signal loss through the multiplexing chain was about 6 dB. This is an acceptable figure.

Figure 13 shows the electronic schematic diagram for one of the four identical receiving multiplexing boards. The prime consideration in designing the layout was to make the board as compact as practical in order to minimize the bulk of the electronics in the vicinity of the hand. Figure 14 shows the completed board design. Each board is 2" x 4". Circuit boards for the receiving multiplexers were fabricated, populated with components and tested with a signal generator before installing in a shielded enclosure on the back of the hand..

Task 3--Transmitting Multiplexing

Although this task is entitled "Transmitting Multiplexing", it is not practical to multiplex the rather high voltage, rapid pulses required for optimum excitation of the PVDF. Instead, individual pulsers are used.

By using separate cables for the arrays on each digit segment, each digit has leads connecting to a total of 38 transmitting rows. It is important to have the sensitivity of the receiving columns in the arrays as high as is practical in order to detect very small signal echoes that may be produced by sharp edges and points. The easiest way to achieve this is by not paralleling any of the leads going to the receiving columns. As a consequence of this, the transmitting leads for the arrays on the three segments can be connected in parallel as much as possible. The result of this is that only 14 pulsers are required for each digit. Moreover, the transmitting leads for the arrays on each digit can also be connected in parallel with those of the other digits so that only 14 pulsers are required for the entire hand.

The specific components used in the pulsers must be capable of driving the large capacitive loads of all the corresponding transmitting rows of the different arrays being connected in parallel. This load is on the order of 10 nF. Prototype pulsers capable of operating at up to 200 volts and having high current drive capability were designed, fabricated, and then tested by driving a 10 nF capacitor for several hours without overheating or failure.

Next, a circuit board was design for the 14 pulsers, using surface-mount components to save space. Figure 15 shows the layout for this board. This board was fabricated, populated with components and tested.

Since the individual tactile arrays do not all contain the same number of elements, determining valid addresses and an orderly scan pattern was not a trivial task. Preliminary computer code was written to generate the physical sensor addresses from the Boolean equations for one possible scanning order. This scan order is shown in Figure 16. Scan order can be easily changed through software.

Two changes were made to the circuit boards containing the pulser electronics. It was discovered that the integrated circuit address decoders on these boards were not working. They were replaced. No cause was found for their failure. It was also suspected that noise was corrupting the signals coming into these decoders and altering the sensor element address. Therefore, buffers were added to the pulser address lines. After the redesigned tactile sensors were mounted on the hand and connected to the electronics, it was discovered that the

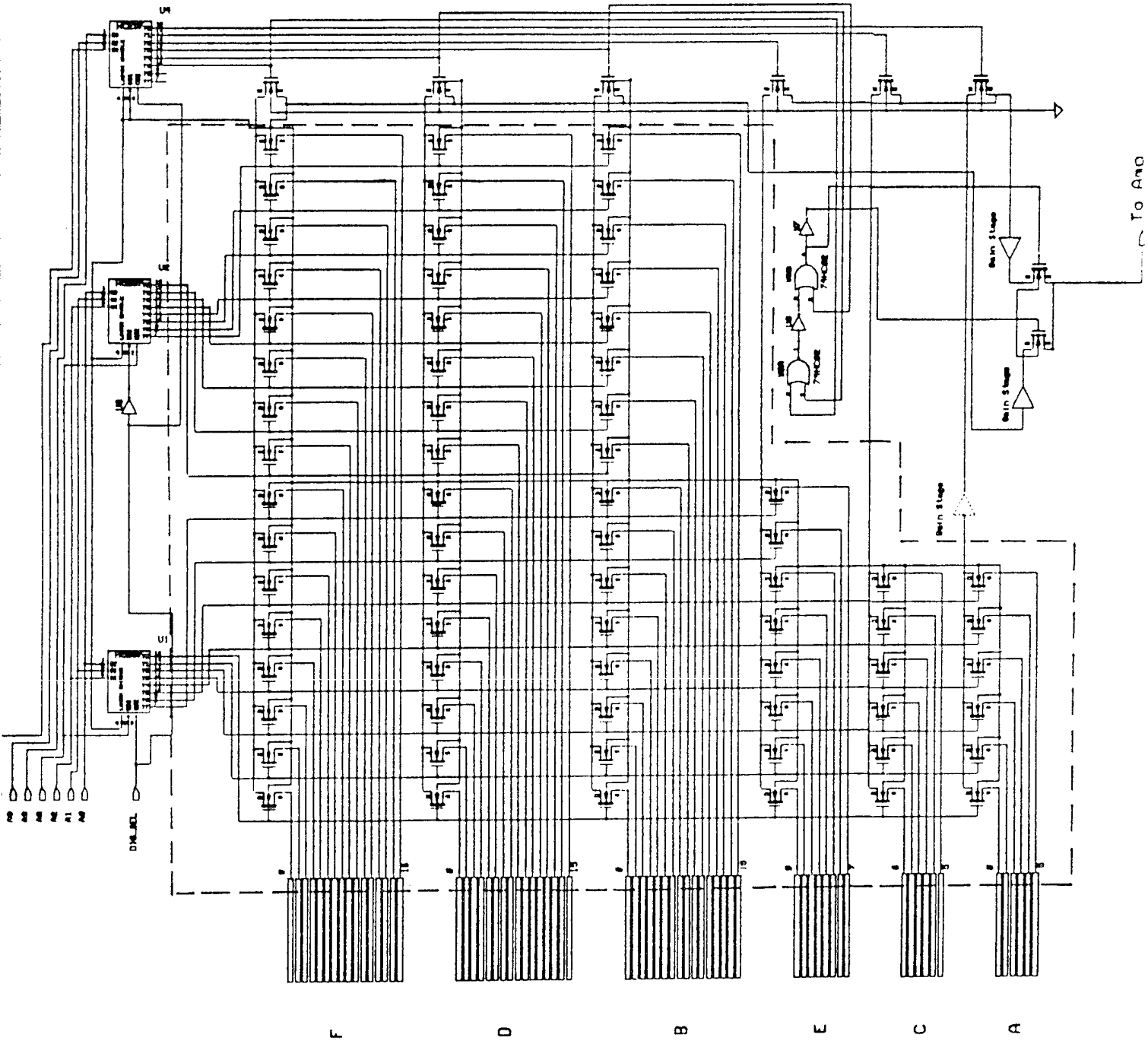

FIGURE 13. Schematic for receiving column multiplexing board. Wiring within the dashed outline is shown in Figure 6.

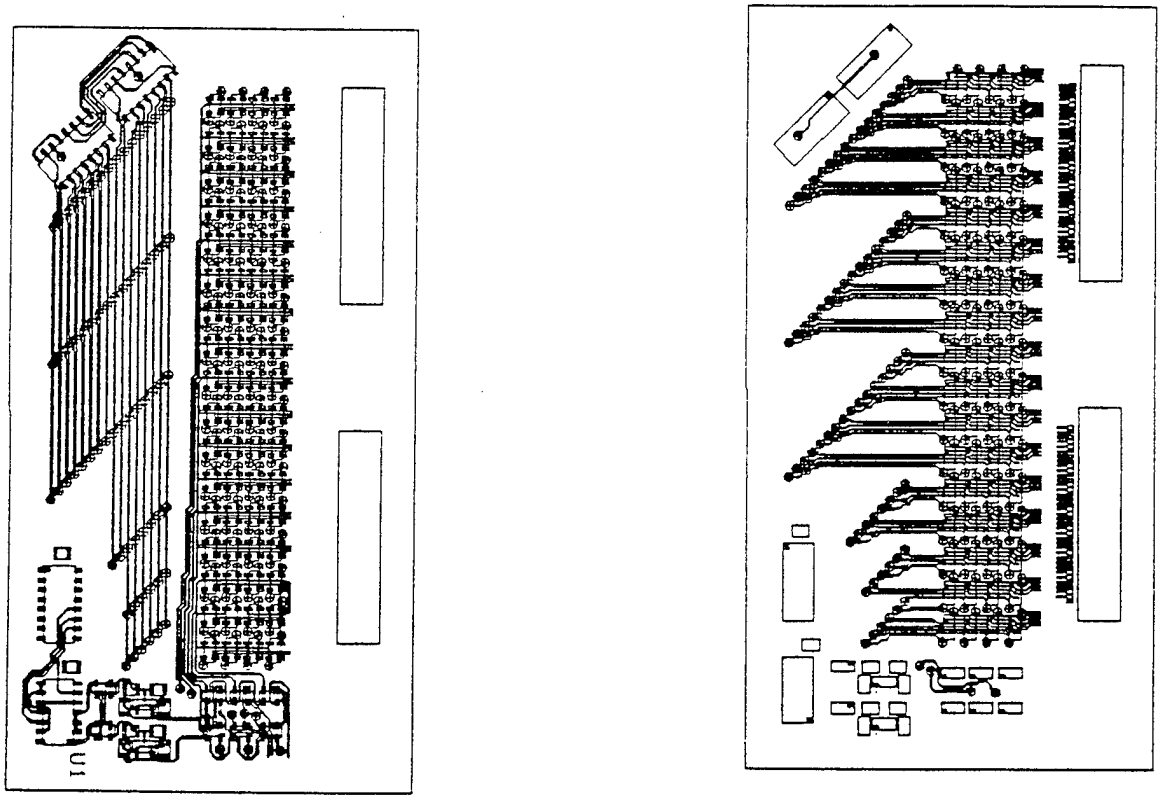

Figure14. Receiving Multiplexer Board Design
1:1 Scale

EXCITATION PCB -
TOP VIEW

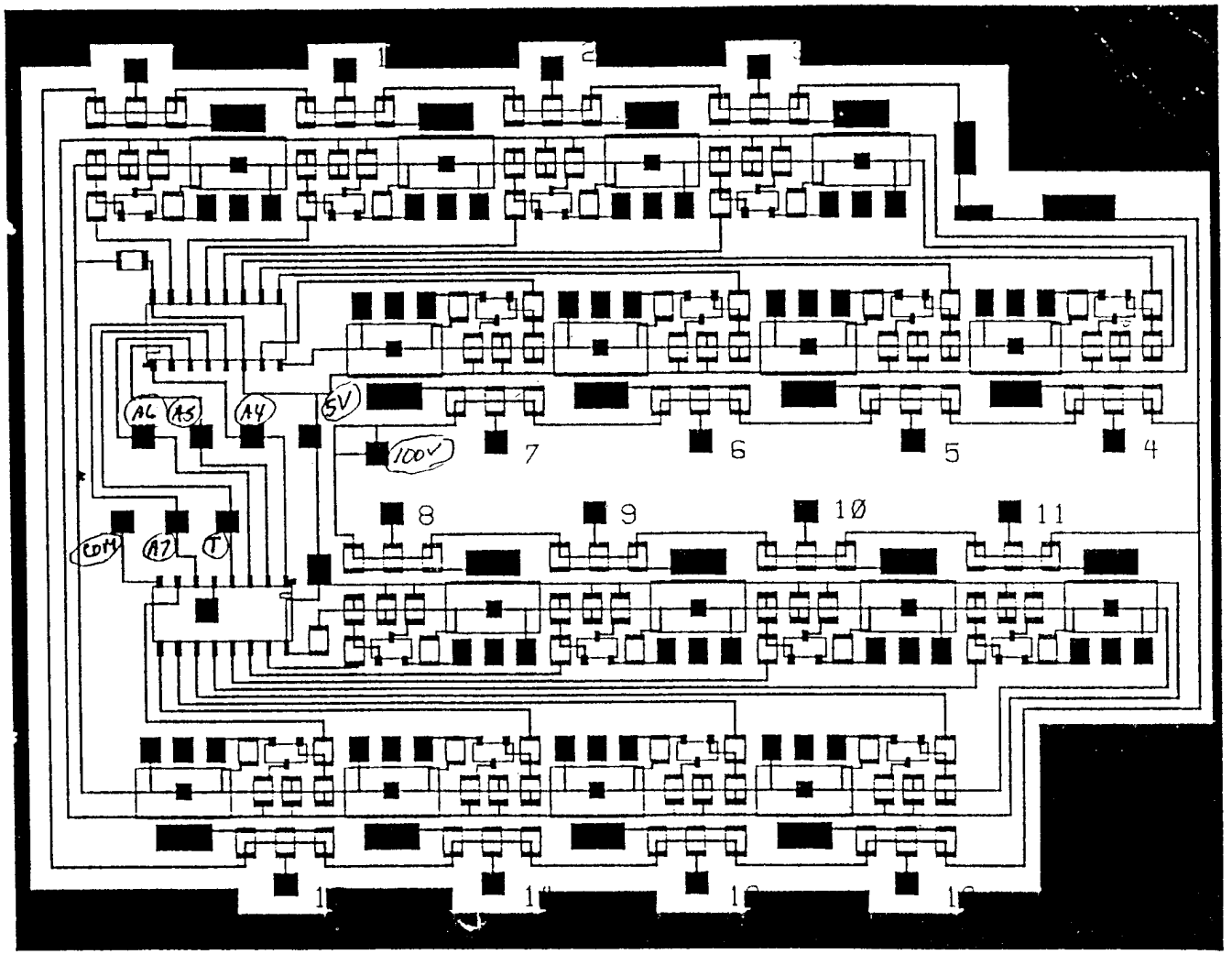

TRIGGER

Figure 15. Circuit Board for 14 Pulsers

REVISIONS				
ZONE	REV.	DESCRIPTION	DATE	APPROVED

Array Addr. Order

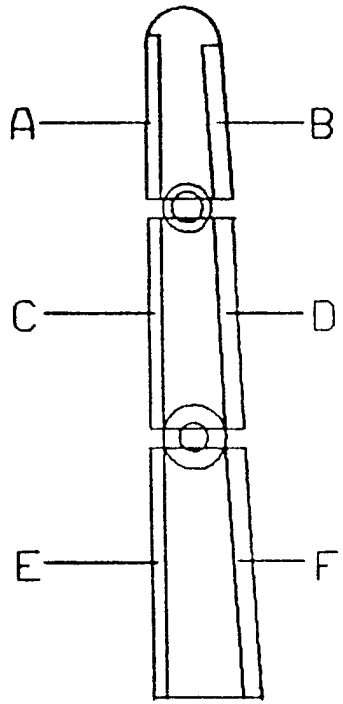

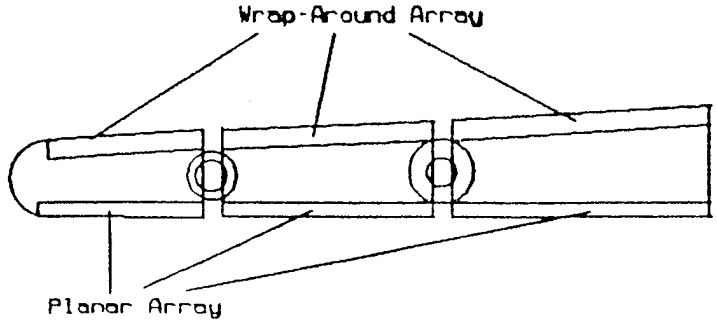

Order of Array Scanning

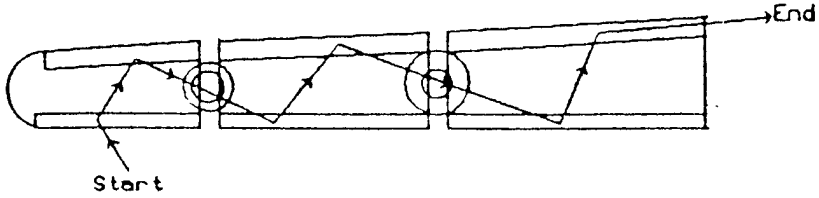

FIGURE 16. Sensor Scan Pattern

TITLE: Digit Addressing			
SIZE A	DRAWN: J.H.	DRAWING NUMBER	REV.
	ENGR: J.H.		
SCALE: N.A	DATE: 2/28/92	SHEET 1 OF 2	

original pulsers were not capable of driving the large capacitive load of the tactile sensors. The reason for this is not known since in bench tests no problems with driving an equivalent load were apparent.

This problem could be solved either by designing more powerful pulsers or to divide the capacitive load among additional pulsers. Additional pulsers could be used to advantage by increasing the scan rate and/or to increase echo amplitude by eliminating a stage of receiving multiplexing.

The decision was made to modify the original pulser rather than fabricate additional pulsers since this was the original plan, and little time and funds remained in the contract extension period.

What happened next was a series of events which significantly complicated construction, packaging, and trouble-shooting and repair of the hand electronics because the old printed circuit board for the pulsers was retained. In hind sight, most of the problems mentioned above could have been either reduced or eliminated entirely if the pulsers were totally redesigned, including their printed circuit board.

Instead, the old board was used because it already had the appropriate connections and wire routing for the sensor leads. Leaded components for the pulser electronics were purchased since delivery of the proper surface-mount components would take too long. The leaded components were much larger and were incompatible with the circuit board. Consequently, the pulser circuits grew in the z-direction. That is, self-supporting circuits were constructed vertically from the circuit boards. Being self-supporting, the circuits were fragile. During construction, trouble shooting or repair, surrounding circuitry could be easily damaged. Moreover, since the receiving multiplexing boards were mounted beneath the pulser board, these could not be trouble-shot or repaired without partially removing the pulser board circuitry.

There were two consequences of this type of construction. The first, mechanical fragility of the pulser electronics was described above, but still needs to be stressed. The second was that the installation of the remaining two multiplexer boards was impractical due to the damage this process would cause.

Task 4--Interface Board Address

A scheme for increasing the addressing capability of the tactile sensor system interface board was developed. However, this scheme was irrelevant to the new interface that had to be used to remove communications from the VME bus, as requested by the Air Force.

Task 5--Increase Receiver Gain

The goal of this task was to modify the existing tactile sensor electronics so that a greater range of echo signal amplitudes could be detected. The existing electronics were limited at the high end by saturation effects. Echoes that were too large would cause an amplifier in the detection circuit to saturate, thereby erroneously triggering the time-of-flight detector. Consequently, the echo signal amplifier gain had to be set low enough so that no echo signal would be large enough to cause saturation. The lower detection limit was

determined by the noise level in the electronics. The result was that only a rather narrow range of echo signal amplitudes would be reliably detected.

Amplifiers with a logarithmic gain characteristic were investigated, along with an echo signal amplifier having much greater gain and higher signal-to-noise ratio than the one used in the current tactile sensor system. This amplifier clipped at large signal levels, but did not saturate. In conjunction with this amplifier, the zero-crossing detector was also modified so that it was unaffected by either amplifier saturation or clipping. These two modifications allowed much greater amplifier gains to be used.

The logarithmic amplifiers investigated were inferior to this amplifier.

This new receiving amplifier was first implemented and evaluated with leaded components, then fabricated in surface-mount form for testing the tactile sensors. Its layout can be seen in Figure 17, just to the left of the "+5v" and "GND" bonding pads at the right of the figure.

During the contract extension period, it was discovered that the original receiving amplifier was clipping the peaks of the stronger echo signals. This clipping significantly reduced the signal-to-noise ratio of the detection channel. Significant effort was spent in designing and trouble-shooting a new amplifier circuit. The design of this amplifier presents a challenge. It must have very high gain and low noise while extremely rapidly recovering from overload by the excitation pulse. A new amplifier was successfully developed which met the above requirements and was superior to the old amplifier.

Test Fixture

Because the sensor electronics were substantially upgraded during the course of this contract, we lost our benchmark. That is to say, tactile sensor arrays that may have unacceptable performance when used with the old electronics may work quite well with the new. Therefore, we needed to try the UMDH sensors with the new electronics so that unnecessary effort would not be spent on needless sensor development. We also needed a convenient method for checking out the sensor arrays as they were mounted on the hand. Viewing echo signals on an oscilloscope for several hundred tactile elements was not a convenient method.

Consequently, we implemented a test fixture consisting of the new sensor electronics in a configuration that could operate the maximum array size used on the UMDH (i.e. 14 x 24). Figure 17 shows the component side of the circuit board layout for the 24 multiplexing channels and the receiving amplifier used in the test fixture. The hole pattern near the center of the board is for a 30-pin edge connector. The scale in Figure 12 is 4:1. Figure 18 shows the component side of the excitation board used in the test fixture. This board was designed to accommodate up to 16 excitation channels even though only 14 are required.

The entire system for testing the sensors consisted of the following components. The test fixture itself which was a small box containing the pulsers, receiving multiplexers and amplifier. Small cables connected this box to a second box containing the zero-crossing detector, the time-of-flight circuitry, and the state machine for operating the sensor. A cable from this second box terminated at a digital I/O board in a PC-type microcomputer. This

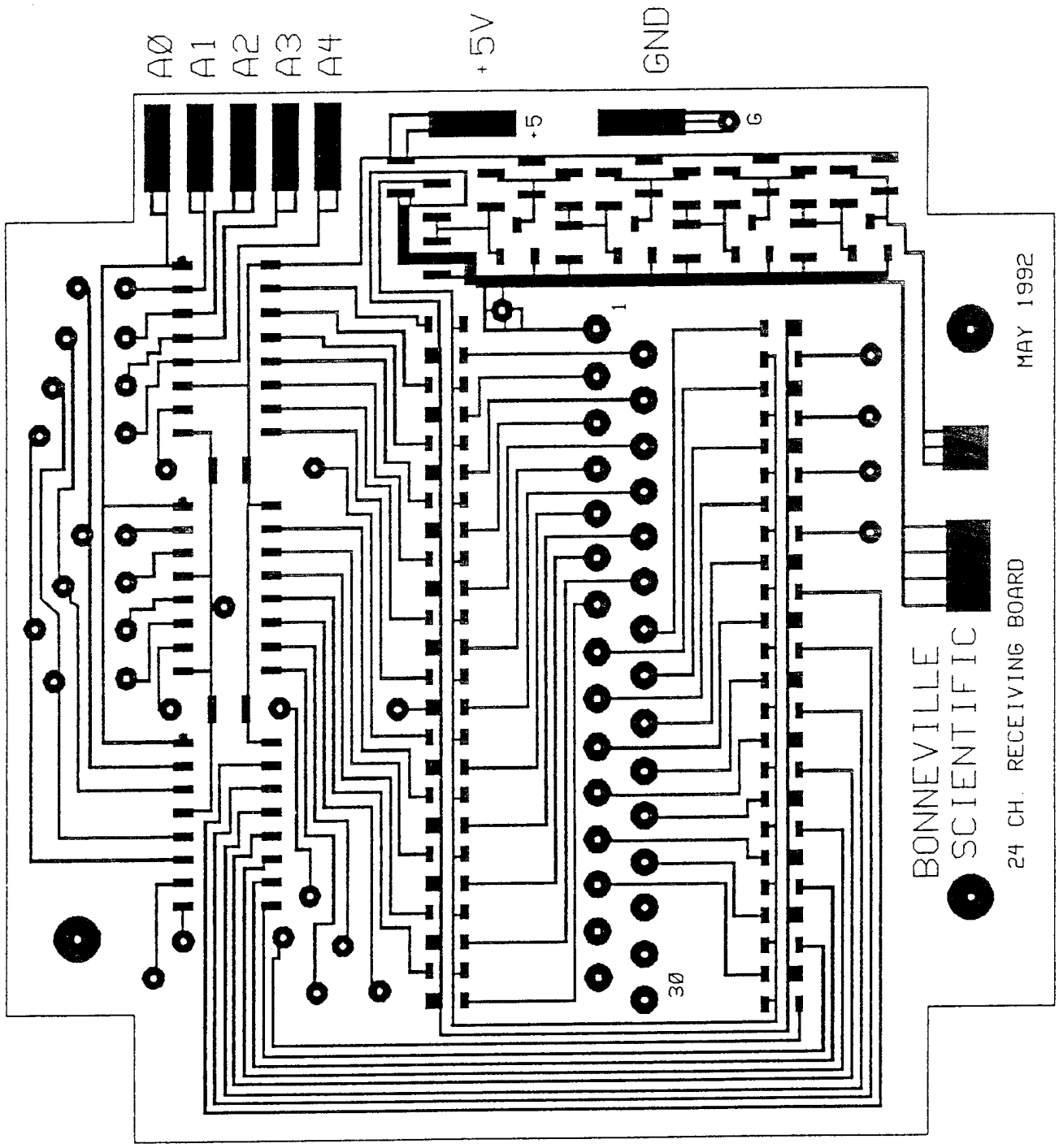

FIGURE 17. Component side of 24-channel receiving board
Scale 3:1

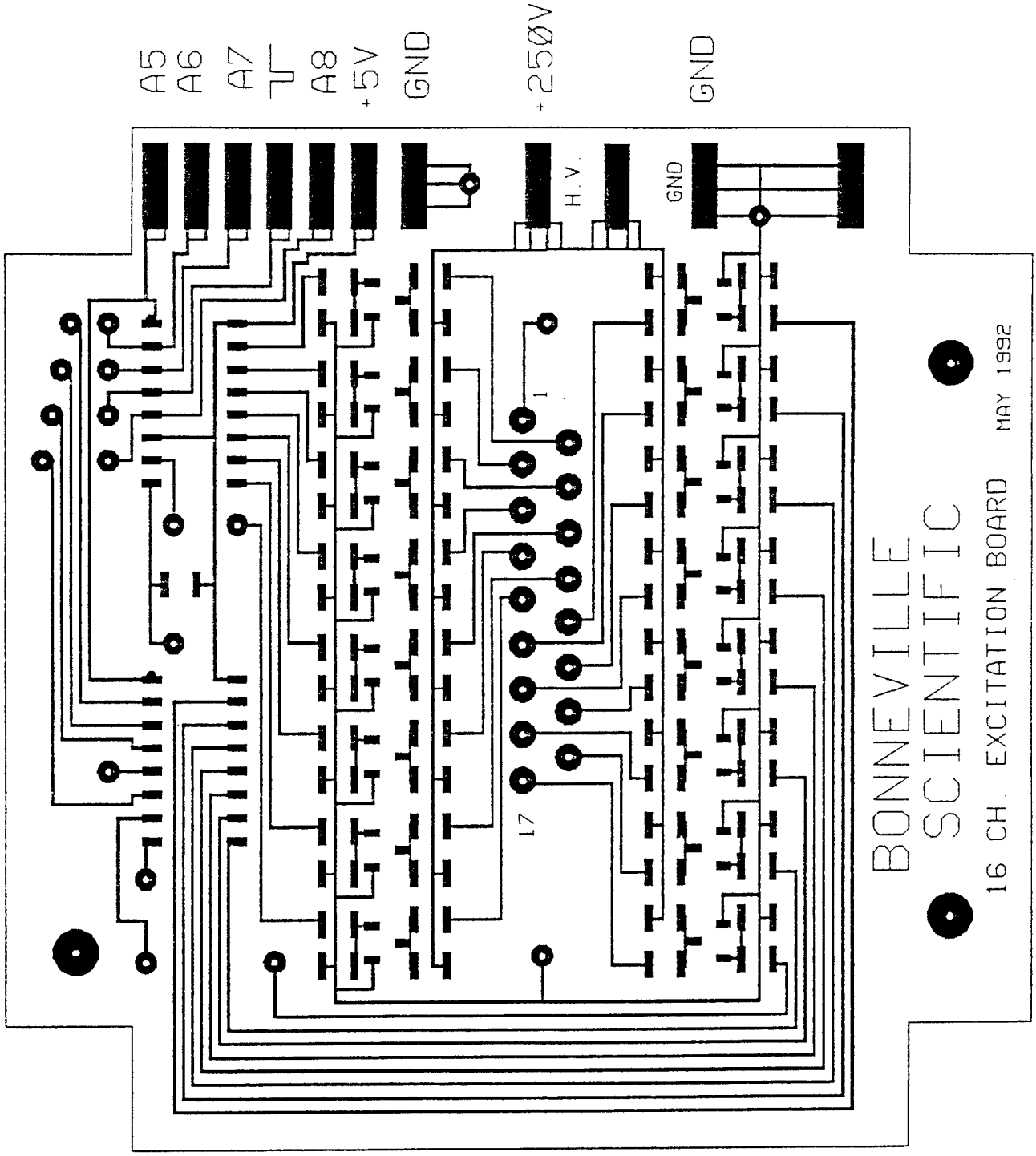

FIGURE 18. Component side of 16-channel excitation board
Scale 3:1

microcomputer controlled the operation of the tactile sensor and provided images of the tactile data.

The test fixture was fabricated, interfaced to the PC, and was debugged. Initially, the operation of this system was erratic and some channels were very noisy. The problem was due to be poor solder joints made when transistors used in the pulser circuits were replaced by units having greater gain. The performance of these electronics was evaluated using a flat, 16 x 16 element array. Sensor performance was vastly superior to that obtained with the previous electronics. Sensitivity was greatly increased and noise decreased. Figure 19 shows the tactile image obtained from a washer using the test fixture and 16 x 16 sensor. The left-to-right force gradient across the washer is apparent in this figure as well as low noise (all non-contacted taxels are "off").

Even though the sensor electronics performed beyond expectations, a slight change was made in the receiving amplifier to further increase the signal-to-noise ratio. Since this change involved the elimination of a transistor and the use of a higher bias voltage, already available in the VME-bus card cage, it was almost "free".

After evaluation, adapter cables were designed and fabricated to allow the sensors for the UMDH to be connected to the test fixture.

This test fixture set-up allowed the new electronics to be evaluated and also provided a means for testing the tactile arrays both after they were first assembled and again when they were installed on the digits. This latter benefit was achieved through the display of tactile images on the PC.

In the final version of the system electronics for the hand, the functions provided by the test fixture are performed by electronics housed on the top of the remotizer, just proximal to the hand. The functions provided by the second box in the test fixture are performed by electronics housed in the VME enclosure.

Junction Box

A "Junction box" was designed to connect the twelve flex-circuit cables which exit the four digits of the hand with the cables from the receiving multiplexer and pulser circuit boards. This box is 1 1/2" wide by 3" long by 3/4" high and fits on the back of the hand, proximal to the base of the digits. The flex-circuit cables from the fingers are anchored within the box. Conventional wires are soldered to the flex-circuit cable bonding pads and terminate in miniature connectors on the multiplexer and pulser boards which are mounted in a box on the remotizer. This box is 3" x 5" x 3/4" high.

After the pulsers were changed to drive the larger capacitive load presented by the redesigned tactile sensors, the height of the electronics box had to be increased. by about an inch.

A simple cable tensioning mechanism was designed for mounting at the junction box in order to prevent loops from forming at the joints in the fingers. The Air Force stated its concern that this device would add "unmodeled compliance" to the mechanics of the hand. It was later discovered that this mechanism was not required.

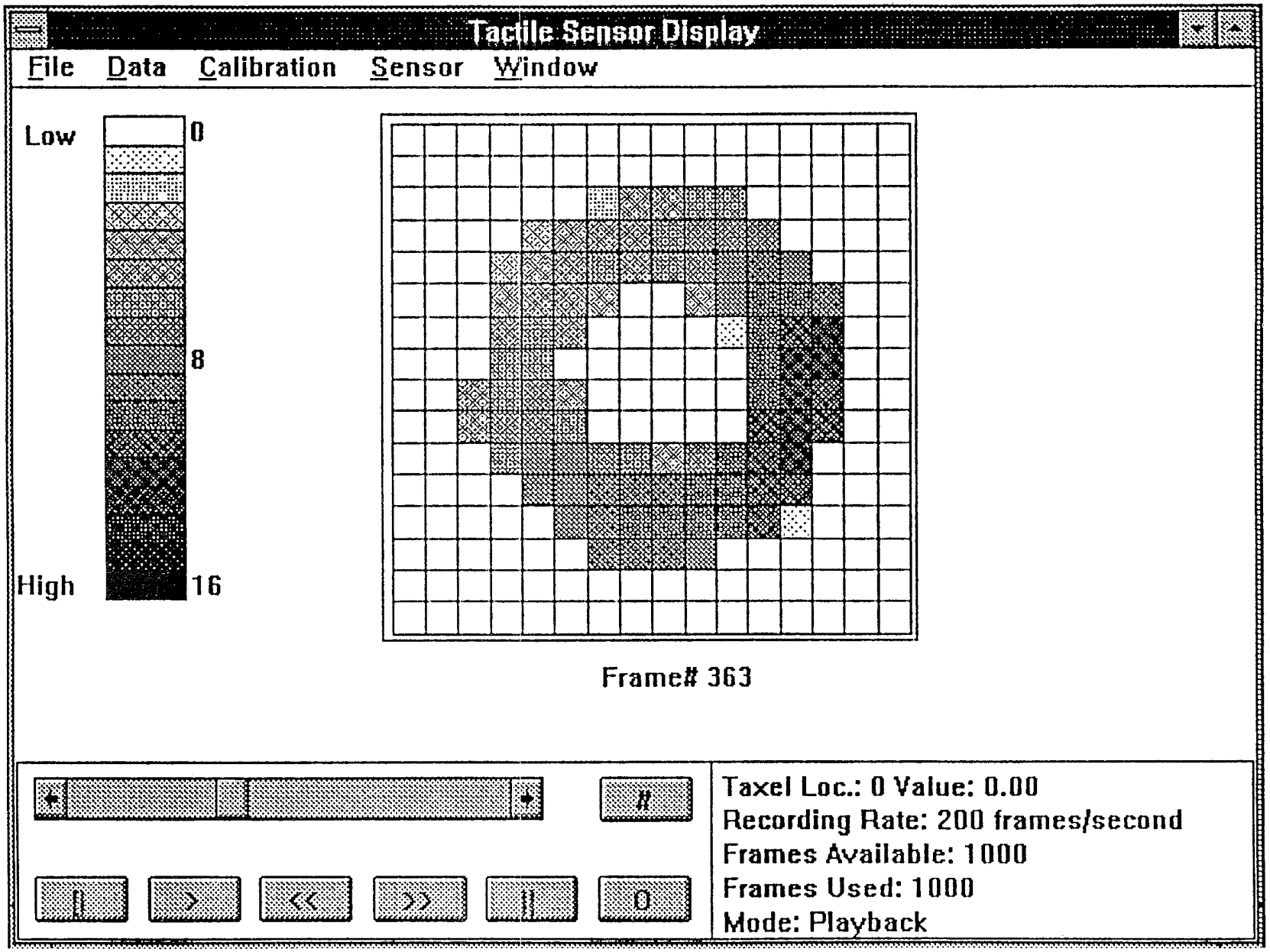

Figure 19. Tactile Image of a washer Using the Test Fixture

Task 6--Install in Existing Electronics

The remaining sensor system electronics consists of the zero-crossing detector, time-of-flight detector, a small state machine, glue logic, and pulser power supply module. These circuits were implemented on a VME wire-wrap circuit board. This board is housed next to the 68020 single-board computer (SBC) in the VME enclosure, but does not communicate over the VME bus.

The planned tactile sensor system for the UMDH originally would have used a 60-conductor cable emanating from the sensor electronics on the remotizer and terminating at a circuit board in the VME-bus card cage. Besides the improvements made in the sensor electronics during the course of this contract, the electronics were reconfigured to reduce the size of the interconnecting cable. This was achieved by relocating the zero-crossing and time-of-flight detectors from the vicinity of the sensor to the SBC card cage, and connecting the two sets of electronics with an analog signal link. This change also made it possible to eliminate the opto-isolators which were located at both ends of the original 60-conductor cable so that cable size was drastically reduced.

Task 7--Test and Debug Electronics

The sensor system electronics under went testing as circuit details were developed and when prototypes were constructed; then again when finished circuit boards were fabricated. The pulsers, multiplexers, echo amplifier, zero-crossing detector, and time-of-flight detector were used repeatedly in the test fixture. Many of these circuits were also used in other tactile sensor systems for well over a year. There were no component failures during this period.

All sensor system electronics were tested and debugged separately before being connected to the 68020 and the tactile sensor cables.

To facilitate both the testing of the redesigned tactile sensors after mounting on the hand and the testing of the sensor electronics, we decided to use the test fixture PC, interface boards and software for operating the hand's sensors and electronics. This simplified testing because the PC and interface is known to work well and it eliminates the complexity of the Sun workstation, bus coupler and 68020 microcomputer board from the system, along with the use of the rather untried software. A custom cable was fabricated to interface the PC to the hand-mounted sensor electronics.

A great deal of work was devoted to reducing electrical noise in the system electronics. A large number of changes were made in shielding and grounding. These changes greatly reduced the noise level on the receiving, transmitting, power supply, and addressing lines.

Documentation

Further, detailed documentation of the sensor system electronics appears in Appendix 3.

Objective 4--Tactile Sensor System Software

This objective and the associated tasks are from the Phase II proposal in which two 68000-based single board computers (SBC's) were to be used for operating the tactile sensors.

These two computers were to communicate with their respective interface boards over the VME bus. This computer system would be accessed through a computer terminal connected to the RS-232 serial interface port on one of the SBC's. This proposed approach maximally utilized existing, tested computer interface designs and software for operating the tactile sensors. Development of new software was proposed for the graphical display of tactile images. A glance at these images would quickly tell which elements in the tactile array were operative and which were not. From experience, Bonneville felt strongly that with over three thousand tactile elements on the hand that this feature was important for both the initial trouble-shooting stage of this project as well as later, during its routine use of the hand.

Half-way through the Phase II contract period, a contract modification was issued which eliminated this objective for developing the data display software and changed the computer hardware and overall computer architecture for the tactile sensor system. Therefore, the four tasks listed below from the Phase II proposal are largely irrelevant.

Task 1--Increase Addressing

Task 2--Bus Sharing

Task 3--Group Tactile Data

Task 4--Display Tactile Data

The new architecture utilized a Sun SPARCstation computer, which would "host" a VME-bus-compatible 68020 SBC. The SBC would operate the tactile sensors and the SPARCStation would communicate with the SBC via a Bit-3 bus coupler. Unlike the proposed system, the SBC was required to have a tactile sensor electronics interface which did not utilize the VME bus.

Hardware

Interface Board. The interface board is responsible for controlling the tactile sensor "front-end electronics", echo detection, and communications between the tactile sensors and the 68020 SBC. It is important to note that the interface board does not directly use the VME bus for communications between the tactile sensors and the 68020 SBC. This communications is accomplished by utilizing the P2 connector's user-defined pins on the J2 backplane. Consequently, there are no VME bus bandwidth reductions due to tactile sensor communications. The communications protocol is implemented via a standard 68230 PIT on the 68020 SBC to provide a bi-directional 16-bit link between the SBC and the interface board.

The tactile sensor state machine and interface controller were combined into one state machine for handling both communications with the 68230 parallel interface and for controlling the tactile sensor. The interface board also contained the zero-crossing and the time-of-flight detectors.

The interface board was designed using a CAD system which supported both schematic capture and simulation. After the initial design was completed, the board was wire-wrapped onto a single standard 6U wire-wrap card. Throughout the wire-wrap process, methods were used to help ensure the accuracy of the connections and thus further reduce the time required for debugging the board. Also, the board was wire-wrapped and debugged in sections to help modularize the process. This wire-wrap board resides in the VME enclosure, next to the 68020 SBC.

Upon completion of the interface board, one problem was discovered at the very end of the trouble shooting process. When the logic analyzer probes were removed from one of the circuits, the board ceased to function properly. The problem was traced to an assumed internal difference between the two types of counters that could be used a particular circuit. Changing from 74F163's to 74F161's solved the problem even though these parts are reported by the manufacturer to have equivalent timing parameters.

Radstone PME68-26 68020 SBC. The 68020 board is responsible for directly controlling the tactile sensors, and acquiring and storing the data from them. All data acquired from the sensors, including those for calibration purposes, are stored in the on-board dual port RAM for the SBC.

The only work done to this board were those procedures necessary to configure the SBC to run with the target-level debugger and the Bit-3 bus coupler. This involved setting jumpers on the SBC itself. Note that these procedures are documented in the Radstone manual for the board.

Bit-3 coupler (68020 & Sun SPARC sides). The bus coupler consists of two circuit boards--one that plugs into a connector on the VME bus and one that plugs into the SPARCstation's S-bus connector. The two boards are interconnected via a 25-foot-long cable. These two boards allow the sun SPARCstation to communicate with the 68020 SBC via the VME bus. The only procedures that were necessary for establishing this communications link through the bus-coupler were those in the installation instructions.

Software

Embedded code (68020 SBC). The bulk of the software effort was consumed by the writing of the embedded code for the 68020 SBC. This code has all of the responsibility for operating the tactile sensors in response to commands sent from the sun SPARCstation. The code accepts the following commands from the SPARCstation:

1. STOP - In response to this command, the operation currently being executed will stop when it is finished.
2. START - This command begins the scanning of the arrays and the storing of data returned from the sensors.
3. CALIBRATE - When this command is issued, time-of-flight values are gathered and stored for use in zeroing the sensor. This operation is normally done when the sensors are unloaded.
4. STOP IMMEDIATE - This command immediately halts the current sensor operation, regardless of what that operation is.
5. RESET - This command resets the frame counters.

Additional commands can be easily added.

SPARCstation Code. The software on the SPARCstation was written strictly to test the basic functionality of the embedded C code. It is a minimal program. Basically, this program prompts the user for keystrokes and then calibrates, starts and stops the scanning of the sensors in response to these keystrokes. Following the above sequence, the program then

retrieves the entire circular buffer of data from the 68020 SBC and displays it on the SPARCstation's screen. Note that this is a very elementary test.

Most of the testing of this software and the embedded C code was performed using the entire hardware/software system except for the tactile sensors themselves. The results of these tests were all favorable. Limited testing was conducted with the tactile sensors connected to the electronics. No failures or "bugs" were experienced. It's highly unlikely that the addition of the sensors would effect of the rest of the system.

Software was written for displaying the raw time-of-flight data from the tactile sensors. In this primitive display, the time-of-flight values are presented in patterns which approximate the outline of the corresponding tactile array. There is a direct correspondence between the taxel location in the array and the position of the time-of-flight value on the screen of the workstation.

Documentation

All software developed by Bonneville Scientific for this contract contains embedded documentation.

Objective 5--Tactile Sensor System Evaluation

Meaningful evaluation of the tactile sensor system for the UMDH did not occur during the first 24 months of this Phase II contract. When the system was complete and all interconnections were made, there were no indications that valid time-of-flight (TOF) data were being sent to the SUN workstation. System complexity made it difficult to determine whether the problem or problems were with the sensors, sensor electronics, computers, bus couplers, or software.

However, it was rather quickly established that echo signals were not being detected and that there were problems with the sensors and/or their cabling. Efforts to quantitate these problems are described under Objective 1, Task 1--Sensor Evaluation results since the problems identified were primarily with the sensors.

Other problems, either identified or suggested, were that the pulsers were not adequately driving their capacitive load and the shielding and grounding of the sensor cabling were inadequate. Problems higher up in the system were not identified because they were not looked for. In order to conduct the limited trouble-shooting of the sensors and their associated electronics, the computer system was either not used or minimally used.

The redesigned tactile sensors were tested after fabrication, then again after installation on the digits of the hand. All elements were functional before installation on the hand. After installation, some elements, typically those near the edges of the sensors where the wrap-around and planar sensors meet, had small, subthreshold echoes. This was determined with the PC operating the sensors in conjunction with the hand-mounted sensor electronics.

No quantitative assessment of tactile sensor operation could be made after sensor control was switched over the 68020 microprocessor and Sun workstation computer. Operation of the sensors was verified by viewing the displayed time-of-flight values and

witnessing their change as the sensors were palpated. However, the extremely rapid up-date rate of the workstation's display made quantifying time-of-flight changes almost impossible.

CONTRACT MODIFICATION

On 28 January 1992 this contract was modified to better meet the Air Force's requirements concerning the microprocessor architecture used to operate the tactile sensors and for including a computer workstation for overall control of the tactile sensor system. The modified statement of work for this contract appears in Appendix 7.

CONTRACT EXTENSION

On 15 September, 1993 this 24-month contract was officially extended for an additional nine months. This extension was based upon Bonneville Scientific's proposal to the Air Force (Appendix 8). The immediate goal of this extension was to more fully determine the extent and causes of failures in the tactile sensors first installed on the UMDH and then to decide whether design changes could be made which would reduce or eliminate the sources sensor failure. If such designs could be conceived and were deemed sufficiently practical, then a tactile sensor would be fabricated based upon these designs and evaluated.

Successful evaluation of this sensor would then lead to the fabrication, testing, and installation on the hand of additional sensors. Sensors would be constructed and installed in a prioritized order. This order was:

a. Finger-tip segment of the index finger
b. Finger-tip segment of the thumb
c. Medial segments of the index finger and thumb
d. Finger-tip and medial segments of the third finger
e. Proximal segments of the above three digits
f. All four digits.

The resources remaining available would determine how far down this list we would be able to proceed.

Addition tasks to be conducted during the extension were: debug sensor electronics (including noise reduction), install thinner rubber coverings for the sensors, integrate the computer systems with the sensor electronics, generate software for a primitive display of the tactile data, and complete systems burn-in and debug.

CONCLUSIONS

By the time that the financial resources were depleted for this research project, Bonneville Scientific had mounted 16 out of the target value of 25 tactile sensor arrays (there are two arrays per sensor--a planar and a wrap-around array). Out of these 18 that were mounted, 12 were connected to the electronics and are fully operational. These 12 arrays are

mounted, 12 were connected to the electronics and are fully operational. These 12 arrays are on the index finger and thumb of the hand. The remaining four arrays are on the finger tips of the other two digits and could be wired to the electronics at a future date.

Because of the design used in the sensors, it is possible to repair them if the failure mode is one that was identified during the "autopsy" of the original sensors. It is also possible to remove and replace the sensors if, for example, a tendon needs to be replaced in the digit.

The tactile sensor system's support electronics are much improved over those that were originally proposed and budgeted for. This improvement occurred because of Bonneville's desire to provide the best system possible and by on-going research in related contracts, as well as by improvements made in Bonneville Scientific's commercial tactile sensor systems. It was not possible to incorporate all of these improvements. Others are mentioned in the "Recommendations" section.

RECOMMENDATIONS

The following is a list of recommendations. Some of these are for improving the performance of the tactile sensor system, others deal with safety issues and, in general, advice on using the system.

1. The current echo detection scheme uses a fixed (although adjustable) threshold level. This level is empirically set so that it is just above the noise level in order to reliably detect the smallest echo possible. Since there is wide variability in echo amplitude during use, replacing the current detector with one having an adaptive threshold will provide substantially increased performance. This was borne out in Bonneville's commercial tactile sensor systems. Changing to this type of detector would require a change in the controlling software so that each tactile element is pulsed twice in succession (The echo from the first pulse is used in setting the threshold value.). Also, only the time-of-flight value due to the second pulse would be saved in memory.
2. The pulser board in the hand-mounted electronics enclosure should be completely rebuilt using a new printed circuit board and suitable surface-mount components. This will make the pulser electronics vastly more rugged (and, therefore, reliable), reduce the overall sensor noise level, and greatly reduce the size of these electronics. This resulting size reduction will make it practical to mount the other two multiplexer boards in the enclosure so that the other four arrays on the finger tips can be used.
3. Array scan patterns which use the same pulser several times in succession may result in overheating of the pulser components. Such scan patterns should be avoided.
4. Multiple echoes occur in the tactile sensors because the ultrasonic pulse is multiply reflected by the outer surface of the rubber covering and the sensor substrate. If the second or third echo in this sequence is sufficiently large, and if the sensors are scanned at a very high rate, then the second or third echo of a previously pulsed element may be erroneously detected as the echo from the currently pulsed element. The only way to make absolutely sure that this will never occur is to use a scan rate sufficiently slow to allow the multiple echoes to die out (e.g. about 80,000 times a

second, or less). This rate could be doubled if another set of 14 pulsers were used. By doubling the number of pulsers and connecting only half the sensors to each bank of pulsers, a sensor connected to one bank could be pulsed while the multiple reflections are dying down in the other bank.

5. Try to avoid placing large forces near the edges of the arrays--where the planar and curved arrays meet. There are bonding pads near some of these edges. Therefore, high forces may break connections. This is the proverbial "rock and a hard place" situation. Connections on the original sensors were protected by placing them underneath the sensors. This made repair almost impossible. Exposing the connections as they are now facilitates repair but also makes them more vulnerable.
6. The sensor system should very accurately measure displacement of the rubber sensor coverings [Hutchings, et al. 1994]. However, the accuracy of the force values calculated from the displacement measurements depends upon how accurately the mechanical response of the rubber covering is modeled. If the rubber is simply assumed to be a linear spring so that the applied force is equal to the change in covering thickness times rubber stiffness, then only rubber stiffness needs to be known. The stiffness of the rubber over each tactile element is not constant since the area of the tactile elements vary. Larger elements have a greater amount of rubber over them. More accurate determination of force characteristics can, of course, be made by applying known forces over individual tactile elements and recording the resulting rubber displacement as indicated by the tactile sensor system. However, because of the rather complex rubber geometry and the fact that the rubber is incompressible (it bulges upward when "compressed"), the rubber coverings should be modeled.
7. Contact along the edges at the sides of the sensors can be detected by the increase in rubber thickness over tactile elements on either side of the edge.
8. The principle effect of temperature changes on the sensors is an expansion of the rubber and a decrease in the speed of sound with increasing temperature. The somewhat long term effects of environmental temperature changes can be compensated by periodically re-zeroing the sensor system when nothing is contacting tactile sensors. Rubber stiffness changes very little with even moderate temperature changes.

BIBLIOGRAPHY

Cutkosky, M. R., Skin Materials for Robotic Fingers, IEEE, International Conference on Robotics and Automation, March 1987.

Hutchings, B. L., A. R. Grahn , and R. J. Peterson, Multiple-Layer Cross-Field Ultrasonic Tactile sensor, IEEE, International Conference on Robotics and Automation, May 1994.

APPENDICES

Appendix 0. Sensing Technology
Appendix 1. (April 9 Memo)--Trade Study and Software Cost Estimate
Appendix 2. Test Data for Original Arrays
Appendix 3. Electronics Documentation
Appendix 4.
Appendix 5.
Appendix 6.
Appendix 7. Statement of Work for Modified Contract
Appendix 8. Proposal for Nine-Month Contract Extension
Appendix 9. Rubber Characteristics
Appendix 10. Sensor Cable Wiring

THIS PAGE

INTENTIONALLY

LEFT BLANK

APPENDIX 0

Sensing Technology

SENSING TECHNOLOGY

The force measuring technique used in Bonneville Scientific's tactile sensors is based upon ultrasonic pulse-echo ranging to determine the change in thickness of a compliant rubber pad compressed by an applied force. Pad thickness is determined from the time it takes an ultrasonic pulse to traverse the pad and return to the transducer. From this time interval measurement, knowledge of the speed of sound in the pad, and knowledge of the pad's modulus (i.e., for rubber, the force required to produce a particular compression) the force deforming the pad can be calculated. In order to accurately and consistently measure the small time changes, the ultrasonic transducer is operated at a high frequency and has a high degree of mechanical dampening. This eliminates ringing of the transducer which could mask reception of the echo signal and allows a simple detection scheme such as threshold or zero-crossing detection to be used for accurately measuring the echo time interval. Based upon these considerations as well as the advantages it offers in array fabrication and its low cost, polyvinylidene fluoride (PVDF) was used for the transducer material.

PVDF is a thin-film polymer material that was originally manufactured for use as a protective packaging material. Piezoelectric PVDF was first used commercially in loudspeakers. Currently it is finding application in arrays for acoustic imaging is closely parallel to ultrasonic pulse-echo imaging. From a consideration of only the piezoelectric properties of PVDF and of conventional ceramic transducers such as lead titanate-zirconate (PZT) for ultrasonic pulse-echo imaging one reaches the following conclusions. When used as a transmitting element the lower stiffness and much better acoustic match to the load (i.e., the rubber pad) with PVDF are highly desirable. However, PVDF has poor coupling, a lower dielectric constant, and high dielectric losses which reduce its potential as a transmitter. When PVDF is used as a receiving element, its low stiffness and relatively small dielectric constant make it a better receiver than transmitter. However, its high dielectric losses significantly degrade the signal-to-noise ratio.

When the non-piezoelectric properties of PVDF are considered, it offers great potential in our force sensor arrays and has the following advantages over PZT transducers. PVDF is inexpensive, rugged and flexible. It is inherently broadband (low mechanical Q) so that, unlike PZT, no matching layers are required. With PVDF, the low acoustic cross coupling through the material provides the necessary acoustic isolation of the array elements. To obtain comparable isolation with PZT, individual elements must be sectioned and mounted on a backing surface or saw-cuts need to be placed between elements. Finally, the thin-film embodiment of the piezoelectric material with very thin layers of metalization on either surface of the sheet lends itself to photoreproduction and photolithographic techniques for relatively simple transducer design and replication.

Figure 1 shows a schematic representation of array construction and the basic principle of operation. Metallized PVDF had the metalization selectively etched from one surface to leave a small number of electroded array elements along with leads terminating near the edge of the film.

Because PVDF has a low mechanical Q, there is very little acoustic coupling from an excited element to neighboring elements; and because of the relatively short distances involved, ultrasonic beam divergence is minimal. Therefore, the echoes do not appreciably spread to adjacent elements.

Force sensing arrays with a large number of sensing elements may require a large number of lead wires to exit the sensor assembly. An array with n elements in a row and m elements in a column may have (n x m)+1 or 2(n x m) leads. This results in a complex sensor design with a bulky cable whose mass or stiffness may cause interference, or many on-sensor switches to reduce the number of external leads required. An attractive alternative is the use of cross-point switching techniques where only one lead for each row and for each column of elements is required. This, in principle, reduces the number of leads to n + m. However, in practice, spurious coupling among force sensor elements either prevents the use of cross-point switching or requires extensive mathematical processing of each sensing element signal to isolate it from the effect of its neighbors.

Bonneville has developed a solution to the cross-point switching problem by using separate PVDF layers - one for transmitting and one for receiving - that are electrically isolated but strongly acoustically coupled. Figure 2 shows a schematic of this arrangement where the transmitting elements are row-elements on the top metallized surface of one PVDF layer and the receiving elements are column-elements on the bottom surface of the lower PVDF layer, and both layers are shielded by ground planes. The array operates in a fashion similar to cross-point switching but with greatly improved performance. In operation, a transmitter row is selected and energized while the desired receiver column is selected and connected to the receiving amplifier. The transmitter element radiates a rectangular ultrasonic pulse the same shape as the element (see Figure 3). When this pulse is reflected from the surface of the elastomeric sheet, a portion of it is received by each of the receiving elements. By only detecting the echo at one particular receiving element, signals are only received from objects directly above the region common to the transmitter row and receiver column. This arrangement also eliminates receiving amplifier overload so that the amplifier is capable of detecting echoes sooner. Therefore, thinner elastomeric sheets can be used over the array elements.

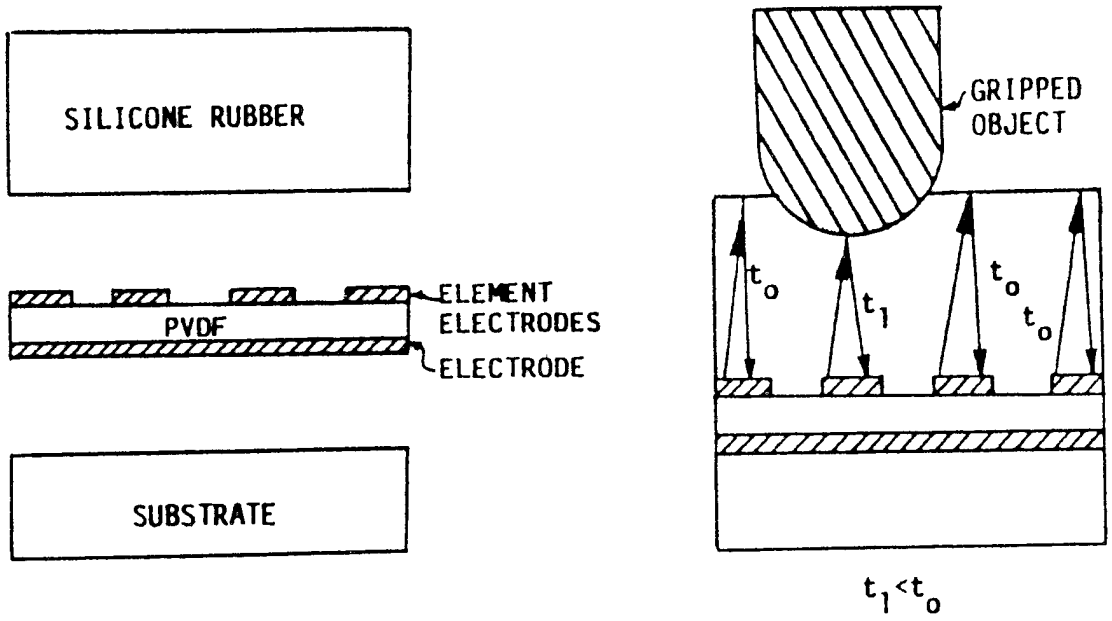

Figure 1. Array construction and principle of operation.

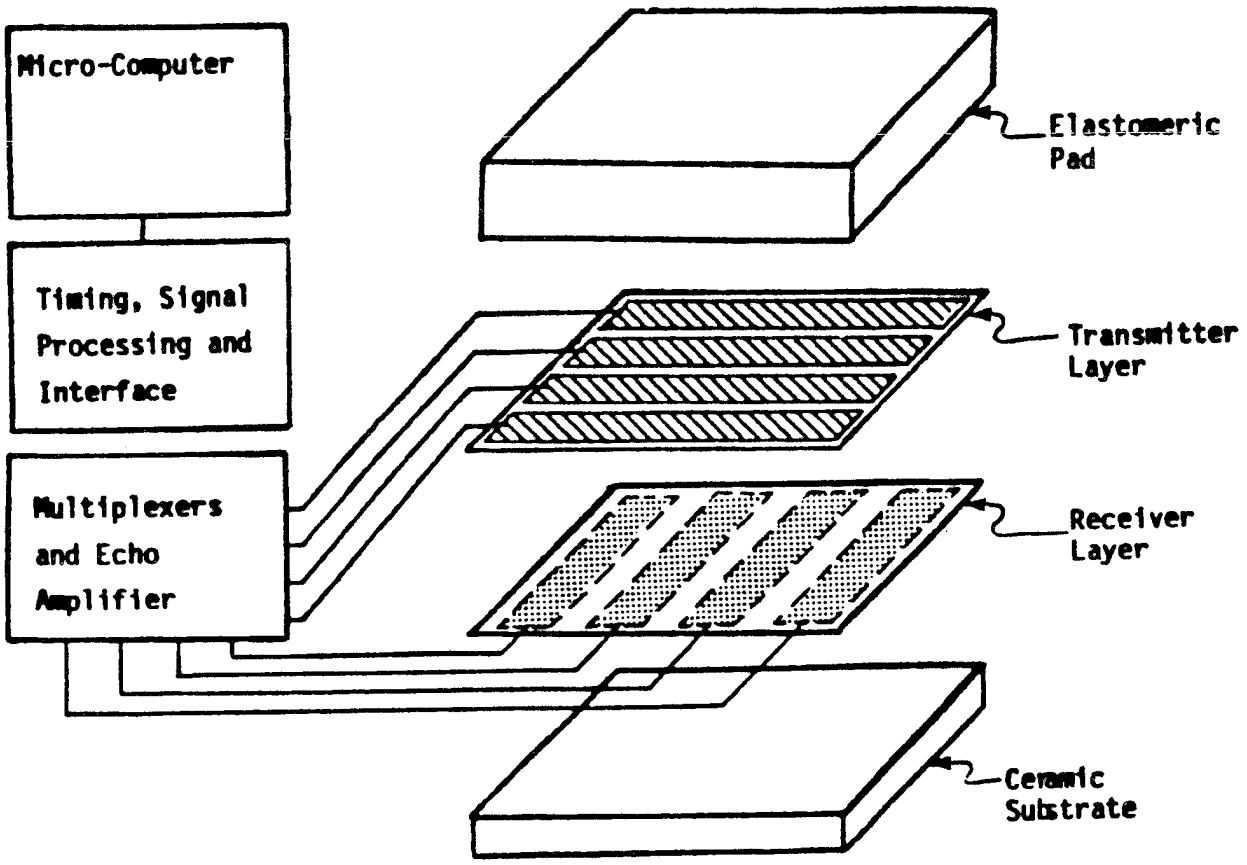

Figure 2. Tactile Sensor with Separate Transmitting and Receiving Layers

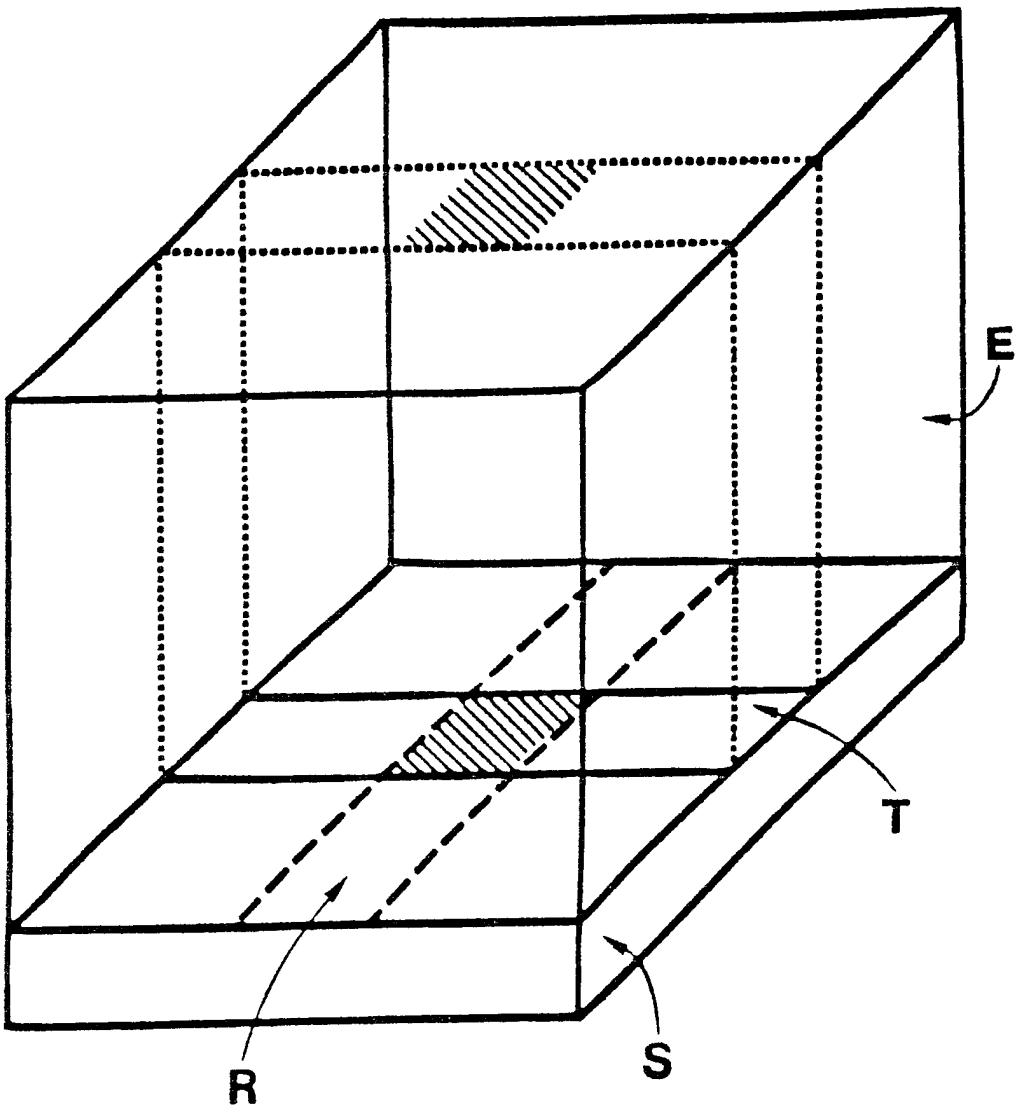

FIGURE 3. Beam Patterns for Sensor Shown in Figure 6.
T: Transmitting Row; R: Receiving Column; S: Substrate;
E: Elastomer. Beam Intersection (Cross-Hatched) Defines
the Tactile Sensitive Area.

THIS PAGE

INTENTIONALLY

LEFT BLANK

APPENDIX 1

Trade Study
and
Software Cost Estimate

APPENDIX 1

TO: Capt. Ammon Wright

FROM: Allen R. Grahn, Bonneville Scientific

DATE: April 9, 1991

RE: Contract No. F41624-91-C-6001, "Anthropomorphic Cutaneous Tactile Sensing on Dexterous Mechanical Hands" (Kick-off Meeting Follow-up)

This memorandum provides information on 1) the practicality of a single 68020-microcomputer board replacing the two 68000 boards in the Bonneville Scientific tactile sensor system, and
2) the manpower and costs for developing software for this system.

1. The Air Force expressed concern that the communications over the VME bus between Bonneville's microprocessors and interface boards would severely restrict communications among other devices utilizing the bus. Consequently, as agreed to, Bonneville Scientific conducted a trade study to determine whether a VME-bus 68000-family microprocessor board was available with a built-in parallel interface appropriate for Bonneville's tactile sensors. A board configured in this way would avoid the VME bus traffic now required for communications with the interface board.

   It was also decided that this board should have a real-time clock and dual-ported memory to facilitate integration with the Sun workstation as well as to facilitate software development. Bonneville searched for microprocessor boards that were powerful and fast enough so that only one processor would be required for operating all the tactile sensors, rather than using two processors as proposed. Besides making the system physically simpler, a single microprocessor would also simplify programing.

   We have identified two vendors of a VME-bus single board computer using a 68020 CPU, having 4 MBytes of dual-ported RAM, a real-time clock, a built-in parallel interface port, and a PROM-based monitor. Although this computer would still require a custom interface board to be compatible with our sensor electronics, this interface board would be much less complex than our current interface board and would not use the VME bus. This computer costs about $3200. $2300 of this cost would come from the amount budgeted for the two

68000 microprocessor boards. An additional $500 to $600 would come from electronic components allocated for the two interface boards (leaving about $400 for components for the new interface board). Manpower originally designated for the construction of the original two interface boards would be reallocated for the design, construction, and test of the new interface board. The remaining $300 for the 68020 board would come from the manpower allotted to task 4 of Objective 3 ("circuitry for each 68000 processor to address the right interface board") since this task would now be eliminated.

2. Our estimate for the software development for the Bonneville Scientific tactile sensor system using the single 68020 microcomputer board described above is separated into two phases.

Phase I of this software development is for operating the tactile sensors, communicating with the bus coupler, storing the raw time-of-flight (TOF) measurements, and calibrating (offsetting) the TOF values. For this task, Bonneville would use a 386-based personal computer communicating with the VME-bus 68020 board with our own Bit 3 bus coupler. The required manpower for this task is estimated to cost $21,486.

Phase II is for the software for 1) providing calculation of force/taxel, average force, maximum force, and torque about the finger axis; 2) receiving commands and transmitting data over a single serial port; 3) providing a debug and system checkout mode; and 4) providing a history collection mode. Manpower for this task is estimated to cost $12,571.

Total manpower cost for the two software development tasks is $34,057. Approximately $8,900 is available in the contract for software development that would be applied toward these two tasks.

Bonneville Scientific recommends that this single-board approach be used in this contract. This approach eliminates interface board communications over the bus, it should be faster than using the two 68000 boards and has a simpler configuration. It also simplifies software development, the dual-ported RAM allows the software to be easily up-dated, and a floating-point co-processor may be added later.

THIS PAGE

INTENTIONALLY

LEFT BLANK

APPENDIX 2

Tactile Sensor Test Data

NOMENCLATURE

DIGIT NUMBER	DIGIT
1	Thumb
2	Index Finger
3	Middle Finger
4	Ring Finger

P = Proximal Digit Segment
M = Medial Digit Segment
D = Distal or Finger-Tip Segment

TEST RESULTS FOR

DIGITS 1, 3 & 4

% acceptable = $\frac{\quad}{263} \times 100\% = 29\%$

= FAILED CAPACITANCE TEST

= ECHO ≥ 200 VOLTS

= DEAD ROW (NO ECHO)

= RESIDUAL ECHO OF NOTE

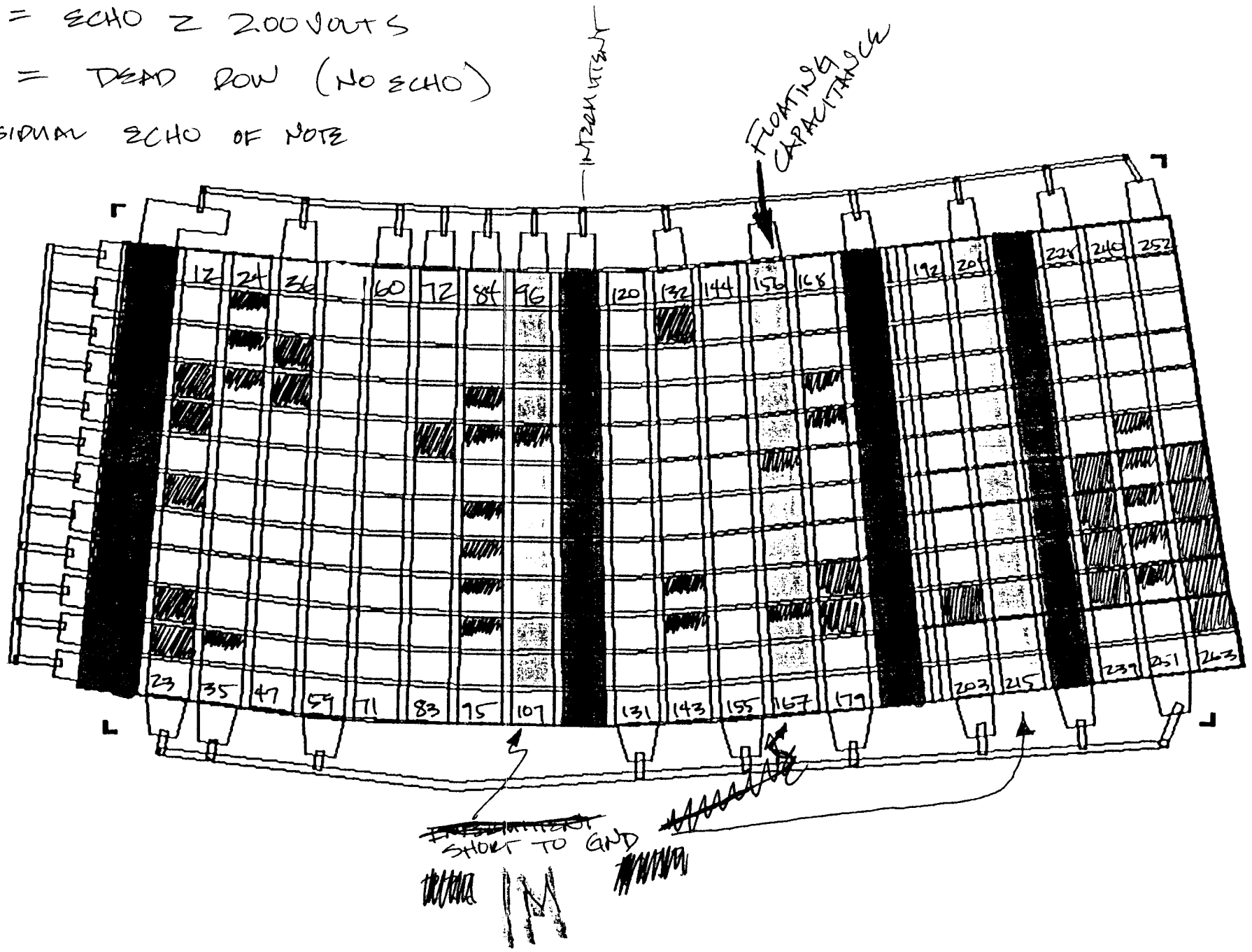

CHARACTERISTICS LOG

EXC CAPACITANCE Sensor No. 1M REC

Element No.	Echo Ampl.	Noise Ampl	Notes
0		0	336
1		1	357
2		2	350
3		3	360
4		4	362
5		5	365
6		6	363
7		7	369
8		8	371
9		9	372
10		10	362
11		11	354
12			
13			
14			
15			
16			
17			
18			
19			
20			
21			
22			
23			
24			
25			
26			
27			
28			
29			
30			
31			

Element No.	Echo Ampl.	Noise Ampl.	Notes
32	0		1020
33	1		785
34	2		778
35	3		815
36	4		812
37	5		822
38	6		811
39	7		819
40	8		-260 ? SHORT TO GND
41	9		829
42	10		852
43	11		842
44	12		857
45	13		-50 ? FLOATS 203 BAD
46	14		25
47	15		790
48	16		771
49	17		-260 SHORT TO GND
50	18		736
51	19		734
52	20		729
53	21		773
54			
55			
56			
57			
58			
59			
60			
61			
62			
63			

CHARACTERISTICS LOG

= TRIPULSE

Sensor No. 1M

Element No.	Echo Ampl.	Noise Ampl	Notes
0			DEAD.
1			
2			
3			
4			
5			
6			
7			
8			
9			
10			
11			DEAD
12		−	VS WIERD FUZZ @ 4 µs
13		−	" " "
14		−	
15		−	.2V @ 3.5 µs FUZZ
16		−	" "
17		−	
18		−	.2V @ 4 µs
19		−	
20		−	
21		−	.2V @ 4
22		−	" "
23		−	
24		−	VS
25		+	.2V @ 3.5
26		+	.5V @ 3.5 µs
27		+	.3 @ 3.5
28		+	
29		+	
30		+	
31		+	

Element No.	Echo Ampl.	Noise Ampl.	Notes
32		+	
33		+	
34		+	.3 @ 4 µs
35		−	VS
36		−	VS
37		−	
38		−	.4 @ 4.5
39		−	.25 @ 4.5
40		−	
41		−	
42		−	
43		−	
44		−	
45		−	
46		+	
47		−	
48		−	
49		−	
50		+	
51		−	
52		−	
53		−	
54		−	
55		−	
56		−	
57		−	
58		−	
59		−	
60		−	
61		−	
62		−	
63		+	

Sensor No._____

Element No.	Echo Ampl.	Noise Ampl	Notes
64		+	
65		+	
66		+	
67		+	
68		+	
69		+	
70		+	
71		+	
72		−	3
73		−	
74		+	
75		+	
76		−	.25 @ 3.5
77		−	
78		−	
79		−	
80		+	
81		+	
82		+	
83		−	
84		−	VS
85		+	
86		+	
87		+	.4 @ 3.0
88		+	" "
89		+	
90		+	.25 @ 3.0
91		+	.3 @ 3.0
92		+	.4 @ 4.0
93		+	.5 @ 4.0
94		+	
95		−	
96		−	VS

Element No.	Echo Ampl.	Noise Ampl.	Notes
97		+	
98		+	
99		+	
100		−	.25 @ 3.5
101		−	
102		−	
103		−	
104		−	
105		+	
106		+	
107		−	
108			Dead
109		−	VS
110		−	
111		−	
112		−	
113		−	VERY SMALL
114		−	
115		−	
116		−	
117		−	
118		−	
119		−	
120		−	
121		−	
122		−	
123		−	
124		−	
125		−	
126		−	
127		−	
128		−	
129		−	

Sensor No._____

Element No.	Echo Ampl.	Noise Ampl	Notes
130		+	
131		−	
132		−	VS
133		−	.30@4.5
134		−	
135		+	
136		+	
137		+	
138		+	
139		+	
140		+	.4@3.0
141		+	.35@3.0
142		+	
143		−	
144		−	VS
145		−	
146		−	
147		−	
148		−	
149		−	
150		−	
151		−	
152		−	
153		−	
154		−	
155		VS	
156		VS	
157		−	
158		−	
159		+	
160		+	
161		+	.25@3.0
162		+	

Element No.	Echo Ampl.	Noise Ampl.	Notes
163		+	
164		+	
165		+	.20@3.0
166		+	
167		−	
168		−	VS
169		+	
170		+	
171		+	.25@3.0
172		+	
173		+	
174		−	
175		−	
176		−	.25@4.0
177		−	.40@4.0
178		−	
179		−	VS
180		−	DEAD
181		−	
182			
183			
184			
185			
186			
187			
188			
189			
190			
191			DEAD
192		−	VS
193		−	
194		−	
195		−	

Sensor No._____

Element No.	Echo Ampl.	Noise Ampl	Notes
196		—	VS
197		—	VS
198		—	VS
199		—	VS
200		—	VS
201		—	VS .15 @ 5.0
202		—	VS
203		—	VS
204		—	VS
205		—	
206		—	
207		—	
208		—	
209		+	
210		—	
211		+	
212		+	
213		+	
214		—	
215		—	VS
216			DEAD
217		—	VS
218		—	
219		—	
220		—	
221		—	
222		—	
223		—	
224		—	
225		—	
226		—	
227		—	
228		—	VS

Element No.	Echo Ampl.	Noise Ampl.	Notes
229		—	
230		—	
231		—	
232		—	
233		—	
234		—	.20 @ 4.0
235		—	.30 @ 4.0
236		—	.30 @ 4.0
237		—	.20 @ 4.0
238		—	
239		—	
240		—	VS
241		—	
242		—	
243		+	
244		+	
245		+	.30 @ 4.5
246		+	.70 @ 4, 5, 6
247		+	.30 @ 4.0
248		+	.30 @ 4.0
249		+	.20 @ 4.0
250		+	
251		—	
252		—	VS
253		—	
254		—	
255		—	
256		—	
257		—	
258		—	.30 @ 4.0
259		—	.30 @ 4.0
260		—	.40 @ 4.0
261		—	.30 @ 4.0
262		—	.20 @ 4.0
263		—	VS

ORIGINAL

% acceptable = $\frac{-}{195} \times 100\% = 40\%$

FAILED CAPACITANCE TEST

ECHO ≥ 2.00 VOLTS

[redacted] DEAD ROW (NO ECHO)

[redacted] = RESIDUAL

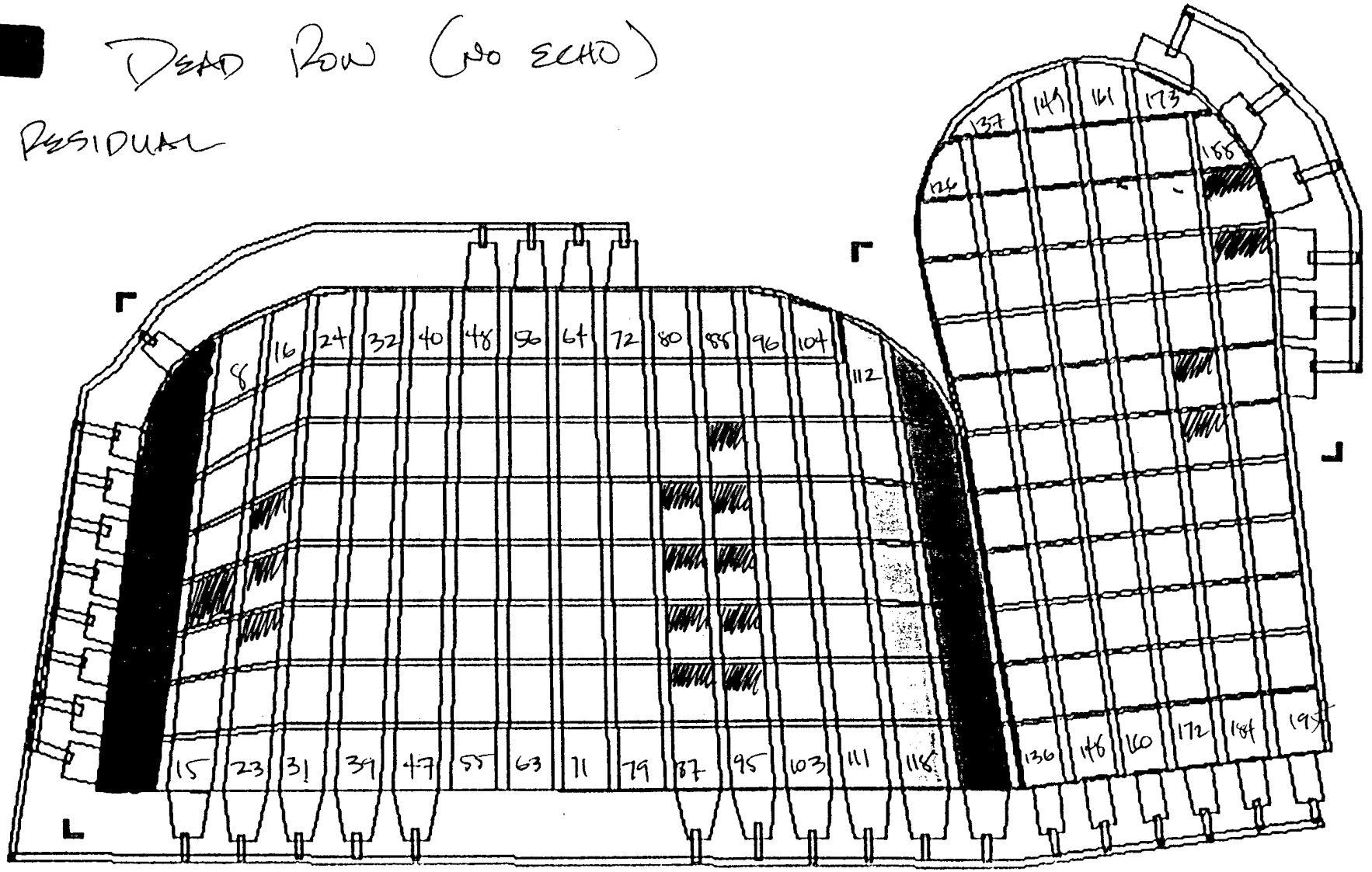

72

CHARACTERISTICS LOG

EXC CAPACITANCE Sensor No. 1D

REC

Element No.	Echo Ampl.	Noise Ampl	Notes
0		0	133
1		1	152
2		2	159
3		3	159
4		4	289
5		5	291
6		6	286
7		7	285
8		8	284
9		9	261
10		10	293
11		11	306
12			
13			
14			
15			
16			
17			
18			
19			
20			
21			
22			
23			
24			
25			
26			
27			
28			
29			
30			
31			

Element No.	Echo Ampl.	Noise Ampl.	Notes
32		0	386
33		1	360
34		2	355
35		3	363
36		4	368
37		5	368
38		6	366
39		7	370
40		8	374
41		9	375
42		10	370
43		11	371
44		12	371
45		13	375
46		14	61 X
47		15	377
48		16	1138
49		17	455
50		18	493
51		19	493
52		20	452
53		21	476
54			
55			
56			
57			
58			
59			
60			
61			
62			
63			

CHARACTERISTICS LOG

- TRIPLE PULSE

Sensor No. 1D

Element No.	Echo Ampl.	Noise Ampl	Notes
0			DEAD
1			
2			
3			
4			
5			
6			
7			DEAD
8		—	
9		—	
10		—	
11		—	
12		—	.4V @ 4μs
13		—	
14		—	
15		—	
16		—	
17		—	
18		—	
19		+	.2V @ 4.8
20		+	.4V @ 4.0
21		+	4 4
22		—	
23		—	
24		—	
25		—	RINGING
26		+	
27		—	
28		—	
29		+	
30		—	
31		—	

Element No.	Echo Ampl.	Noise Ampl.	Notes
32		—	
33		—	
34		—	
35		—	
36		—	
37		—	
38		—	
39		—	
40		—	
41		—	
42		+	
43		—	
44		—	
45		+	
46		+	
47		—	
48		+	
49		—	
50		+	
51		+	
52		+	
53		+	
54		+	
55		—	
56		—	
57		—	
58		+	
59		+	
60		+	
61		+	
62		—	
63		—	

Sensor No._____

Element No.	Echo Ampl.	Noise Ampl	Notes
64		—	
65		—	
66		+	
67		+	
68		+	
69		+	
70		—	
71		—	
72		—	
73		—	
74		+	
75		+	
76		+	
77		+	
78		+	
79		—	
80		—	
81		—	
82		+	
83		+	.2V @ 5μs
84		+	" "
85		+	.3V @ 5μs
86		+	.2V @ 4μs
87		—	
88		+	
89		+	
90		—	.2V @ 5
91		+	.4V @ 5
92		+	" "
93		+	.5@5
94		+	.2@5
95		—	
96		—	

Element No.	Echo Ampl.	Noise Ampl.	Notes
97		—	
98		—	
99		—	
100		—	
101		—	
102		—	
103		—	
104		—	
105		—	
106		—	
107		+	
108		+	
109		—	
110		—	
111		—	
112		—	
112		—	
114		+	
115		+	
116		+	
117		—	
118		—	VS
119		—	DEAD?
120		—	
121		—	
122		—	
123		—	
124		—	
125		—	
126		—	DEAD?
127		—	VS
128		—	VS
129		—	VS

Sensor No._____

Element No.	Echo Ampl.	Noise Ampl	Notes
130		+	
131		—	
132		—	
133		—	
134		—	
135		—	
136		—	VS
137		—	DEAD?
138		—	
139		—	
140		—	
141		—	
142		—	
143		—	
144		—	
145		—	
146		—	
147		—	
148		—	DEAD?
149		+	
150		+	
151		+	
152		—	
153		—	
154		—	
155		—	
156		—	
157		—	
158		—	
159		—	
160		—	VS
161		—	
162		—	

Element No.	Echo Ampl.	Noise Ampl.	Notes
163		+	
164		—	
165		—	
166		—	
167		—	
168		—	
169		—	
170		—	
171		—	
172		—	
173		—	Close
174		—	
175		—	
176		—	
177		—	
178		+	.4V @ 2.5
179		+	.3V @ 3.5
180		—	
181		—	
182		—	
183		—	
184		—	
185		—	
186		—	
187		—	
188		+	
189		+	.6V @ 2.5
190		+	.6V @ 3.5
191		+	
192		—	
193		—	
194		—	
195		—	

[redacted] = DEAD ROW

= ECHO ≥ 2.0 JOULES

[redacted] = RESIDUAL

% acceptable = $\frac{}{385} \times 100\% = 6.5\%$

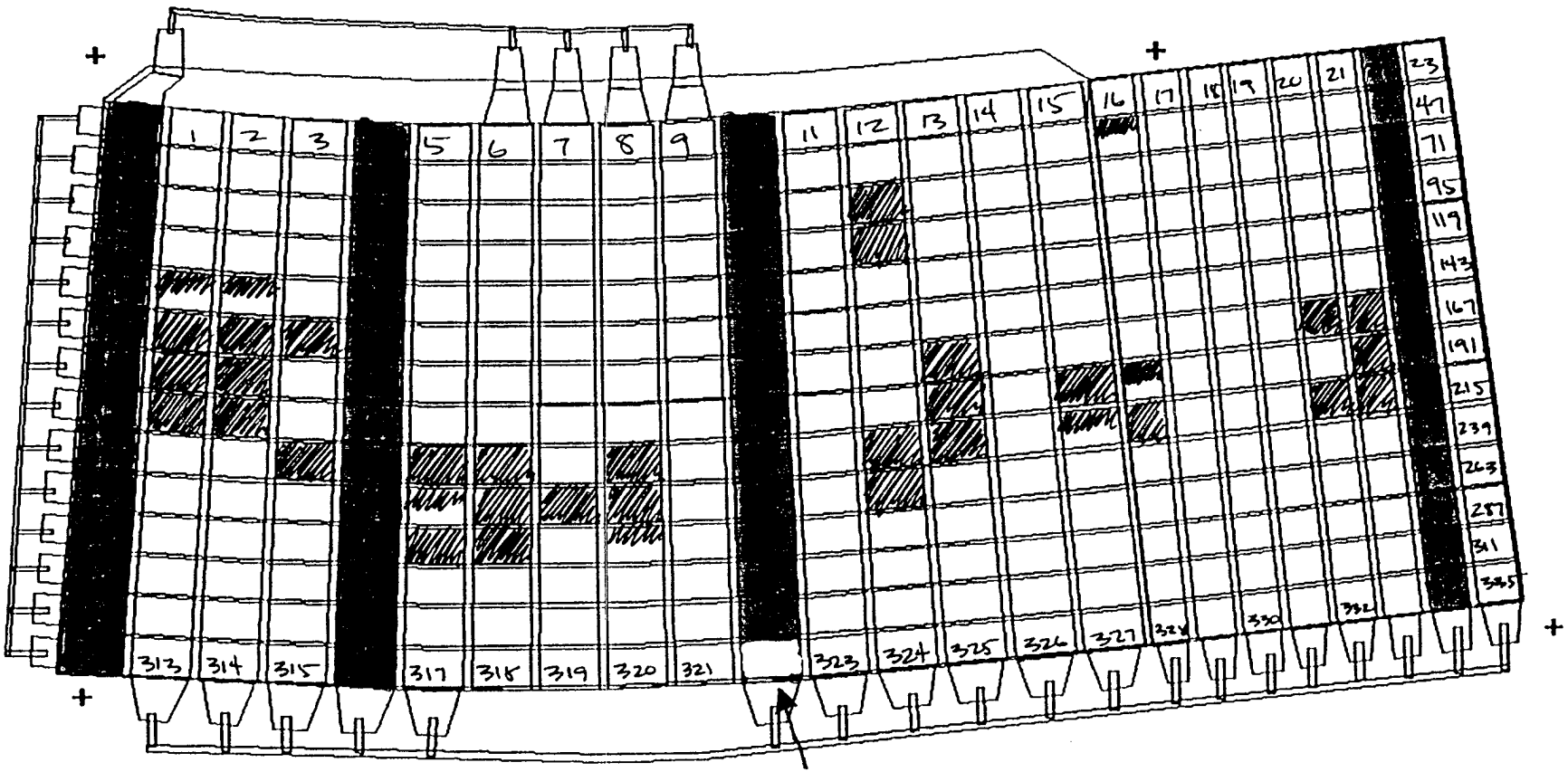

NOT DEAD BUT SHOULD BE ?

3P

CAPACITANCE

Sensor No. 3P

EXC COL ~~Element~~ No.	Echo Ampl.	Noise Ampl	Notes	
0			~~[illegible]~~ pF	480
1			~~456~~	467
2			457	470
3			466	530
4			466	330
5			468	550
6			200	570
7			470	580
8			475	588
9			472	580
10			432	575
11			472	553
12			485	565
13			484	514

REC ROW ~~Element~~ No.	Echo Ampl.	Noise Ampl.	Notes	
0			~~[illegible]~~	1393
1			~~[illegible]~~	1356
2			~~[illegible]~~	1349
3			~~[illegible]~~	1381
4			~~[illegible]~~	1375
5			~~[illegible]~~	1361
6			~~[illegible]~~	1427
7			~~[illegible]~~	1434
8			~~[illegible]~~	1447
9			~~[illegible]~~	1420
10			1370	
11			1390	
12			1365	
13			1366	
14			1367	
15			1370	
16			~~[illegible]~~	981
17			950	
18			907	
19			928	
20			~~[illegible]~~	917
21			~~[illegible]~~	915
22			~~[illegible]~~	925
23			~~[illegible]~~	980

CHARACTERISTICS LOG

Sensor No. 37

Element No.	Echo Ampl.	Noise Ampl	Notes
0			DEAD
1	—		
2	—		
3	—		
4			DEAD
5	—		
6	—		
7	—		
8	—		
9	—		
10			DEAD
11	—		
12	—		
13	—		
14	+		
15	—		
16	—		
17	—		
18	—		
19	—		
20	—		
21	—		
22			DEAD
23	—		
24			DEAD
25	—		
26	—		
27	—		
28	M		DEAD
29	—		
30	—		
31	—		

Element No.	Echo Ampl.	Noise Ampl.	Notes
32	—		
33	—		
34			DEAD
35	—		
36	—		
37	—		
38	+		
39	—		
40	+		RESIDUAL
41	—		
42	—		
43	—		
44	—		
45	—		
46	M		DEAD
47	—		
48	M		DEAD
49	—		
50	+		
51	—		
52			DEAD
53	—		
54	—		
55	—		
56	—		
57	—		
58			DEAD
59	—		
60	—		SMALL RESIDUAL
61	—		4 4
62	—		
63	—		

CHARACTERISTICS LOG

Sensor No. 3P

Element No.	Echo Ampl.	Noise Ampl	Notes
64	—		
65	—		
66	—		
67	—		
68	—		
69	—		
70			DEAD
71	—		
72			DEAD
73	—		
74	—		
75	—		
76			DEAD
77	—		
78	+		
79	—		
80	—		
81	—		
82			DEAD
83	—		
84	—		SM RES
85	—		" "
86	—		
87	—		
88	—		
89	—		
90	—		
91	—		
92	—		
93	—		
94			DEAD
95	—		

Element No.	Echo Ampl.	Noise Ampl.	Notes
96			DEAD
97	+		.70 V RESIDUAL
98	+		.50 V RESIDUAL
99	+		
100			DEAD
101	—		
102	+		
103	+		
104	+		
105	+		
106			DEAD
107	—		
108	—		
109	—		
110	—		
111	—		
112	—		
113	—		
114	—		
115	—		
116	—		
117	—		
118			DEAD
119	—		
120			DEAD
121	—		RESIDUAL
122	—		SM RESIDUAL
123	—		SM RES
124			DEAD
125	—		
126	—		
127	—		

CHARACTERISTICS LOG

Sensor No. 38

Element No.	Echo Ampl.	Noise Ampl	Notes
128	—		
129	—		
130			DEAD
131	—		
132	—		
133	—		
134	—		
135	—		
136	—		
137	—		
138	—		
139	—		
140	+		
141	—		
142			DEAD
143	—		
144			DEAD
145	—		RESIDUAL
146	—		RESIDUAL
147	—		
148	~~—~~		DEAD
149	—		
150	—		
151	—		
152	-		
153	—		
154			DEAD
155	—		
156	—		
157	—		SM RES
158	—		
159	—		

Element No.	Echo Ampl.	Noise Ampl.	Notes
160	+		
161	—		
162	—		
163	—		
164	—		SM RESIDUAL
165	—		SM RESIDUAL
166			DEAD
167	—		
168			DEAD
169	-		RESIDUAL
170	—		SM RESIDUAL
171	—		
172			DEAD.
173	—		
174	—		
175	—		
176	—		
177	—		
178			DEAD
179	—		
180	—		
181	—		RES
182	—		
183	—		RES
184	+		RES
185	~~—~~		~~RESSA~~
186	—		
187	—		
188	—		RESIDUAL .8V
189	—		
190			DEAD
191	+		

CHARACTERISTICS LOG

Sensor No. 38

Element No.	Echo Ampl.	Noise Ampl	Notes
192			DEAD /
193	—		
194	—		
195	—		Res.
196			DEAD /
197	—		SM Res
198	—		" "
199	—		
200	—		" SM Res"
201	—		
202			DEAD /
203	—		
204	—		RESIDUAL
205	—		RESIDUAL
206	—		
207	+		RESIDUAL
208	—		SM RES
209	—		
210	—		
211	—		
212	—		.5V Res
213	—		Res
214			DEAD /
215	—		
216			DEAD /
217	—		
218	—		
219	+		
220			DEAD /
221	+		RESID.
222	—		Res.
223	—		Res

Element No.	Echo Ampl.	Noise Ampl.	Notes
224	—		Res
225	—		.
226			DEAD /
227	—		
228	—		Res
229	—		
230	—		
231	—		
232	—		
233	—		
234	—		
235	—		
236	—		
237	—		
238			DEAD /
239	—		
240			DEAD /
241	—		
242	—		
243	+		
244			DEAD /
245	—		Res
246	—		Res
247	—		
248	+		Res
249	—		
250			DEAD /
251	—		
252	—		
253	—		
254	—		
255	—		

Sensor No. 3P

Element No.	Echo Ampl.	Noise Ampl	Notes
256	—		
257	—		
258	—		
259	—		
260	—		
261	—		
262			DEAD /
263	—		
264			DEAD /
265	—		
266	—		
267	—		
268			DEAD /
269	—		
270	—		
271	—		
272	—		
273	—		
274			DEAD /
275	—		
276	—		
277	—		
278	—		
279	—		
280	—		
281	—		
282	—		
283	—		
284	—		
285	—		
286			DEAD /
287	—		
288			DEAD /

Element No.	Echo Ampl.	Noise Ampl.	Notes
289	—		
290	—		
291	—		
292			DEAD /
293	—		
294	—		
295	—		
296	—		
297	—		
298			DEAD /
299	—		
300	—		
301	—		
302	—		
303	—		
304	—		
305	—		
306	—		
307	—		
308	—		
309	—		
310	-		DEAD /
311	—		
312			DEAD /
313	—		
314	—		
315	—		
316			DEAD /
317	—		
318	—		
319	—		
320	—		
321	—		

Sensor No. 3P

Element No.	Echo Ampl.	Noise Ampl	Notes
322	—		? SHOULD BE DEAD
323	—		
324	—		
325	—		
326	—		
327	—		
328	—		
329	—		
330	—		
331	—		
332	—		
333	—		
334			DEAD
335	—		
			[illegible]

Element No.	Echo Ampl.	Noise Ampl.	Notes

= LOW CAPACITANCE

= ECHO 2 20 VOLTS

= DEAD DOT (NO ECHO)

= NON-FUNCTIONAL - UNUSUALLY NOISY DOT (0.45V NOISE)

= RESIDUAL ECHO OF NOTE.

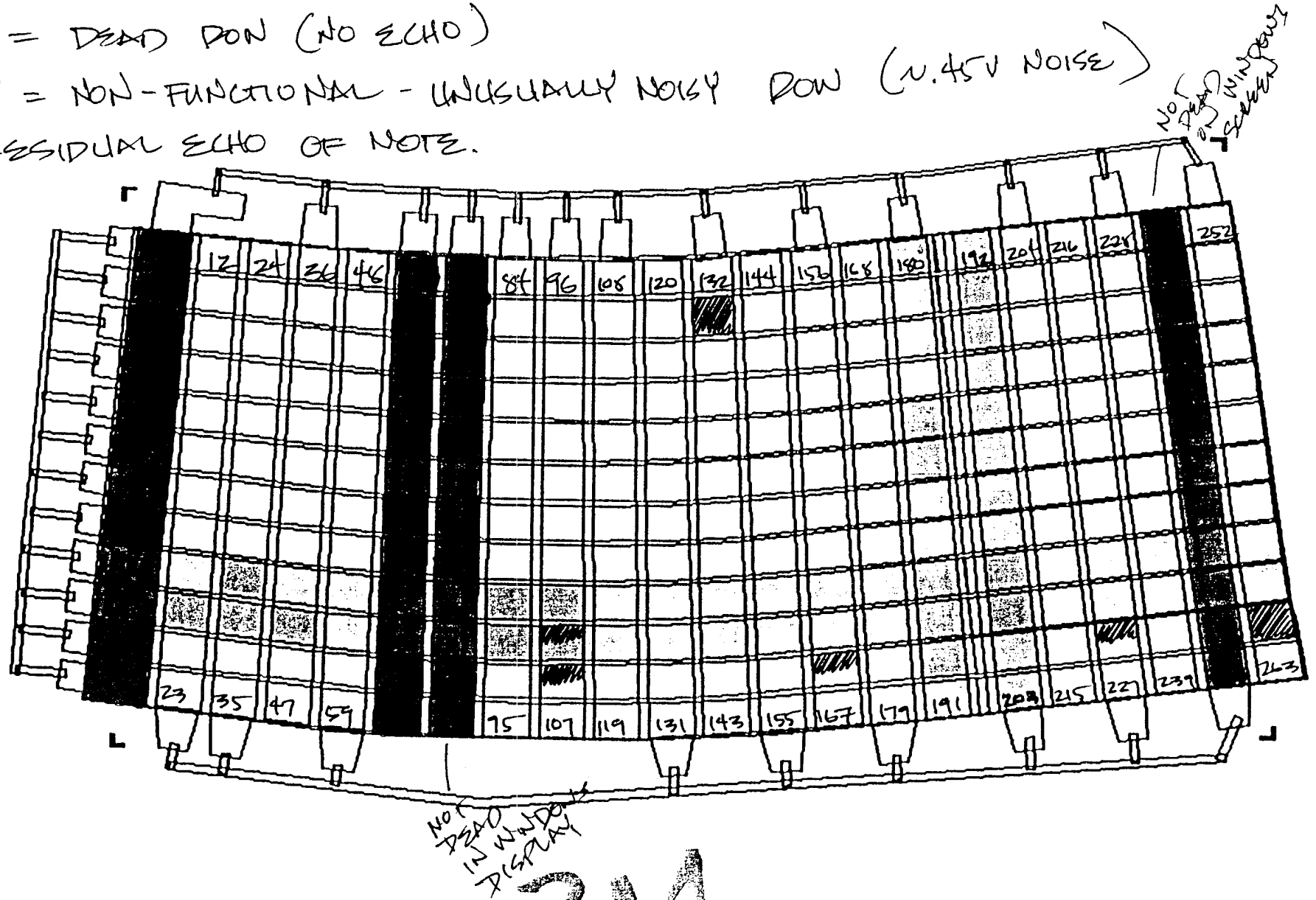

3M

CAPACITANCE

Sensor No. 3M

EXC COL

Element No.	Echo Ampl.	Noise Ampl	Notes
0			335
1			349
2			343
3			347
4			357
5			326
6			344
7			364
8			169
9			170
10			362
11			364

REC ROW

Element No.	Echo Ampl.	Noise Ampl.	Notes
0			984
1			738
2			737
3			758
4			744
5			749
6			733
7			733
8			734
9			739
10			764
11			749
12			760
13			747
14			755
15			53
16			723
17			700
18			690
19			693
20			690
21			741

CHARACTERISTICS LOG

Sensor No. 3M

Element No.	Echo Ampl.	Noise Ampl	Notes
0			DEAD
1			
2			
3			
4			
5			
6			
7			
8			
9			
10			
11			DEAD
12	—		
13	—		
14	—		
15	—		
16	—		
17	—		
18	—		
19	—		
20	+		
21	+		
22	—		
23	—		
24	—		
25	—		
26	—		
27	—		
28	—		
29	+		
30	+		
31	+		

Element No.	Echo Ampl.	Noise Ampl.	Notes
32	+		
33	—		
34	—		
35	—		
36	—		
37	—		
38	—		
39	—		
40	—		
41	—		
42	—		
43	—		
44	—		
45	+		
46	—		
47	—		
48	—		
49	—		
50	—		
51	—		
52	—		
53	—		
54	—		
55	—		
56	—		
57	—		
58	—		
59	—		
60			DEAD
61			
62			
63			

Sensor No._____

Element No.	Echo Ampl.	Noise Ampl	Notes
64			
65			
66			
67			
68			
69			
70			
71			
72			
73			
74			
75			
76			
77			
78			
79			
80			
81			
82			
83			▽ Dead
84	—		
85	—		
86	—		
87	—		
88	—		
89	—		
90	—		
91	—		
92	+		
93	+		
94	+		
95	+		
96	—		

Element No.	Echo Ampl.	Noise Ampl.	Notes
97	—		
98	+		
99	+		
100	—		
101	+		
102	+		
103	+		
104	+		
105	+		-.37 V RMS @ 22MS
106	+		-.25 V RMS
107	—		
108	—		
109	+		
110	+		
111	—		
112	+		
113	+		
114	+		
115	+		
116	—		
117	—		
118	—		
119	—		
120	—		
121	+		
122	+		
123	+		
124	—		
125	+		
126	+		
127	+		
128	—		
129	—		

Sensor No. 3M

Element No.	Echo Ampl.	Noise Ampl	Notes
130	—		
131	—		
132	—		
133	—		.5V REF
134	—		
135	—		
136	+		
137	+		
138	+		
139	+		
140	—		
141	—		
142	—		
143	—		
144	—		
145	—		
146	—		
147	—		
148	—		
149	—		
150	+		
151	+		
152	—		
153	—		
154	—		
155	—		
156	—		
157	—		
158	—		
159	+		
160	+		
161	+		
162	+		

Element No.	Echo Ampl.	Noise Ampl.	Notes
163	+		
164	—		
165	—		
166	+		.8V REF — .4V @ 2
167	—		
168	—		
169	—		
170	—		
171	—		
172	—		
173	—		
174	—		
175	—		
176	—		
177	—		
178	—		
179	—		
180	—		
181	—		
182	—		
183	—		
184	+		
185	+		
186	—		
187	—		PAD NOT POWERED
188	—		
189	—		
190	+		
191	—		
192			NOISY
193			
194			
195			

Sensor No._____

Element No.	Echo Ampl.	Noise Ampl	Notes
196			
197			
198			
199			
200			
201			
202			
203			NOISY
204	—		DEAD
205	—		
206	—		
207	—		
208	—		
209	—		
210	—		
211	—		
212	—		
213	←		
214	—		
215	—		
216	—		
217	—		
218	+		
219	+		
220	+		
221	—		
222	+		
223	—		
224	—		
225	←		
226	+		-.25V Reg @ 3.4μs
227	←		
228	—		

Element No.	Echo Ampl.	Noise Ampl.	Notes
229	—		
230	+		
231	+		
232	+		
233	+		
234	+		
235	+		
236	—		
237	—		
238	+		
239	—		
240	DEAD		
241			DEAD
242			DEAD
243	—		
244			DEAD
245			DEAD
246			
247			
248			
249			
250			
251			DEAD
252	—		
253	—		
254	—		
255	—		
256	+		
257	+		
258	—		
259	+		
260	—		
261	—		
262	—		-.49V Reg @ 3μs
263	—		

Sensor No._____

Element No.	Echo Ampl.	Noise Ampl	Notes
96			⌇
97			
98			
99			
200			
201			
202			▽
203			NOISY
204	—		DEAD
205	—		
206	—		
207	—		
208	—		
209	—		
210	—		
211	—		
212	—		
213	—		
214	—		
215	—		
216	—		
217	—		
218	+		
219	+		
220	+		
221	—		
222	+		
223	—		
224	—		
225	—		
226	+		-.25V Res @ 3.4μs
227	—		
228	—		

Element No.	Echo Ampl.	Noise Ampl.	Notes
229	—		
230	+		
231	+		
232	+		
233	+		
234	+		
235	+		
236	—		
237	—		
238	+		
239	—		
240	DEAD		
241			DEAD
242			DEAD
243	—		
244			DEAD
245			DEAD
246			⌇
247			
248			
249			
250			▽
251			DEAD
252	—		
253	—		
254	—		
255	+		
256	+		
257	+		
258	—		
259	+		
260	—		
261	—		
262	—		-.49V Res @ 8μs
263	—		

ORIGINAL

% acceptable = $\frac{51}{195} \times 100\% = 26.15\%$

[redacted] = FAILED CAPACITANCE TEST

= ECHO ≥ 20 VOLTS

[redacted] = DEAD (NO ECHO) ROW

[redacted] = RESIDUAL ECHO OF NOTE

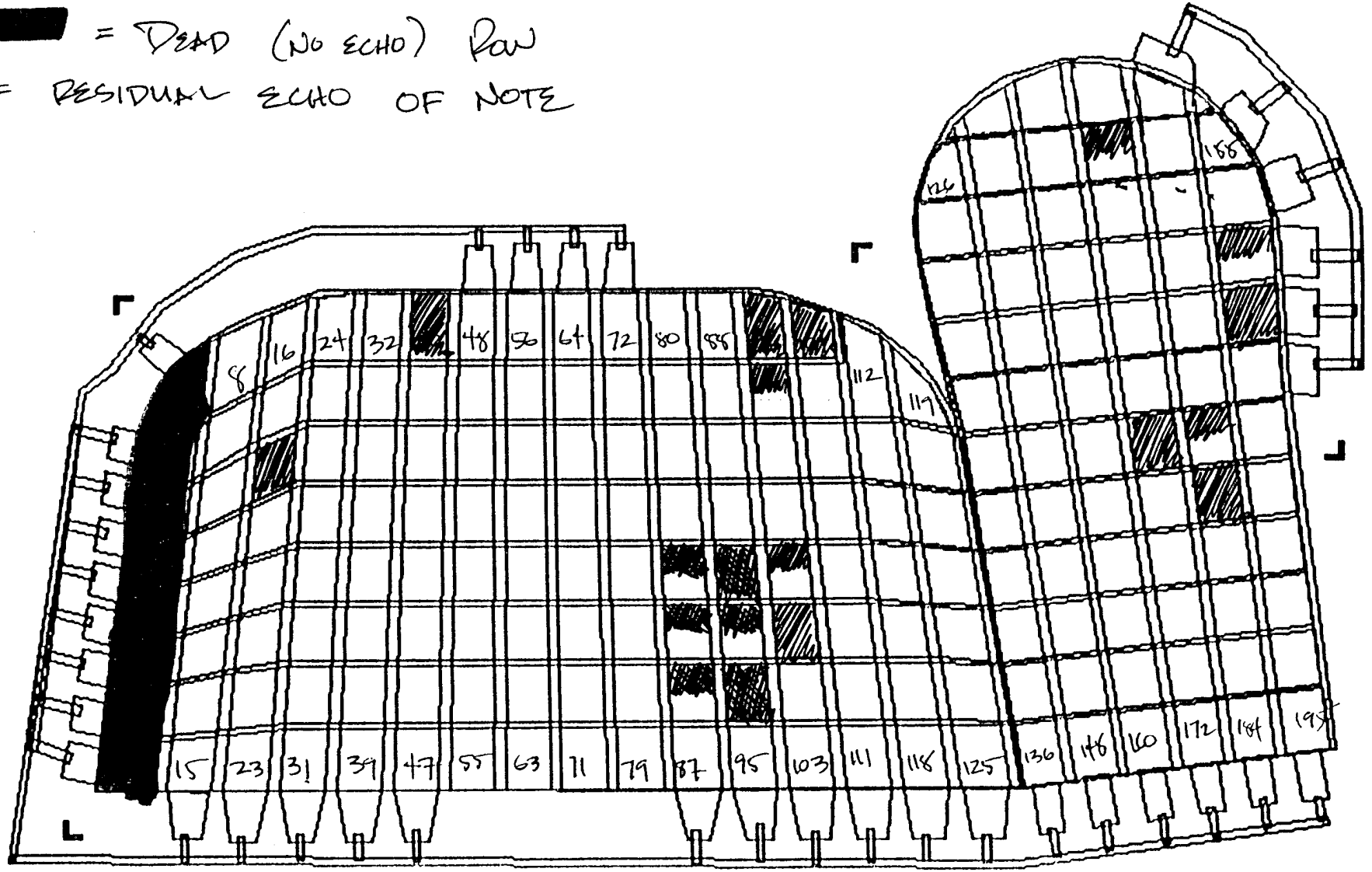

3D

CAPACITANCE

EXC COL

Sensor No. 3D

REC ROW

~~Element~~ No.	Echo Ampl.	Noise Ampl	Notes
0			144
1			168
2			175
3			176
4			372
5			369
6			362
7			360
8			360
9			357
10			372
11			363

~~Element~~ No.	Echo Ampl.	Noise Ampl.	Notes
0			512
1			531
2			520
3			531
4			540
5			531
6			535
7			535
8			537
9			530
10			534
11			539
12			535
13			536
14			489
15			522
16			740
17			785
18			802
19			801
20			774
21			760

CHARACTERISTICS LOG

Sensor No. 30

Element No.	Echo Ampl.	Noise Ampl	Notes
0			DEAD
1			
2			
3			
4			
5			
6			
7			DEAD
8	—		
9	—		
10	—		
11	—		
12	—		
13	—		
14	—		
15	—		
16	—		
17	+		[illegible]
18	—		-.4V Pos
19	—		
20	+		
21	+		
22	—		
23	—		
24	—		
25	+		
26	+		
27	—		
28	+		
29	+		
30	—		
31	—		

Element No.	Echo Ampl.	Noise Ampl.	Notes
32	—		
33	+		
34	+		
35	—		
36	—		
37	—		
38	—		
39	—		
40	—		-.35V Pos @ 6 usec
41	+		
42	—		
43	—		
44	—		
45	+		
46	—		
47	—		
48	—		
49	—		
50	—		
51	+		
52	+		
53	+		
54	—		
55	—		
56	—		
57	+		
58	—		
59	—		
60	+		
61	—		
62	—		
63	—		

Sensor No._____

Element No.	Echo Ampl.	Noise Ampl	Notes
54	—		
55	+		
56	—		
57	—		
58	—		
59	—		
70	—		
71	—		
72	—		
73	—		
74	—		
75	—		
76	+		
77	+		
78	+		
79	+		
80	—		
81	+		
82	—		
83	+		
84	+		-.40V Res @ 2.7
85	+		-.3V Res @ 2.7
86	+		-.2V " "
87	—		
88	—		
89	—		
90	—		
91	—		
92	—		-.25V Res @ 2.7
93	+		" "
94	—		.2V " "
95	—		
96	—		-.3V Res @ 3.5

Element No.	Echo Ampl.	Noise Ampl.	Notes
97	+		-.3V Res @ 3.5
98	—		
99	+		
100	+		-.25 @ 2.7
101	—		" "
102	—		
103	—		
104	—		-.2 @ 3.5
105	+		
106	—		
107	—		
108	+		
109	+		
110	—		
111	—		
112	+		
113	—		
114	—		
115	—		
116	+		
117	—		
118	—		
119	+		
120	—		
121	—		
122	—		RINGING - POOR ADHESION
123	—		
124	—		
125	—		
126	—		
127	—		
128	—		
129	—		

Sensor No._____

Element No.	Echo Ampl.	Noise Ampl	Notes
130	–		
131	–		
132	–		RINGING
133	–		" "
134	–		
135	–		
136	–		
137	–		
138	–		
139	–		
140	+		
141	–		
142	–		
143	–		
144	–		
145	–		
146	–		
147	–		
148	–		RINGING
149	–		
150	+		
151	+		
152	+		
153	–		
154	–		
155	–		
156	–		
157	–		
158	–		
159	–		
160	–		
161	–		
162	+		TRIGGER RINGS

Element No.	Echo Ampl.	Noise Ampl.	Notes
163	+		
164	+		
165	–		
166	–		
167	–		-.5V @ 6 µs
168	–		
169	–		
170	–		
171	–		
172	–		
173	–		
174	+		
175	+		
176	+		
177	–		
178	–		
179	+		-.4V @ 6 µs
180	–		-.3V @ 6 µs
181	–		
182	–		
183	–		
184	–		
185	+		
186	+		
187	+		
188	–		
189	–		
190	–		-.4V @ 6 µs
191	–		-.3V " "
192	–		
193	–		
194	–		
195	–		

% acceptable = $\frac{41}{335} \times 100\% = 8\%$

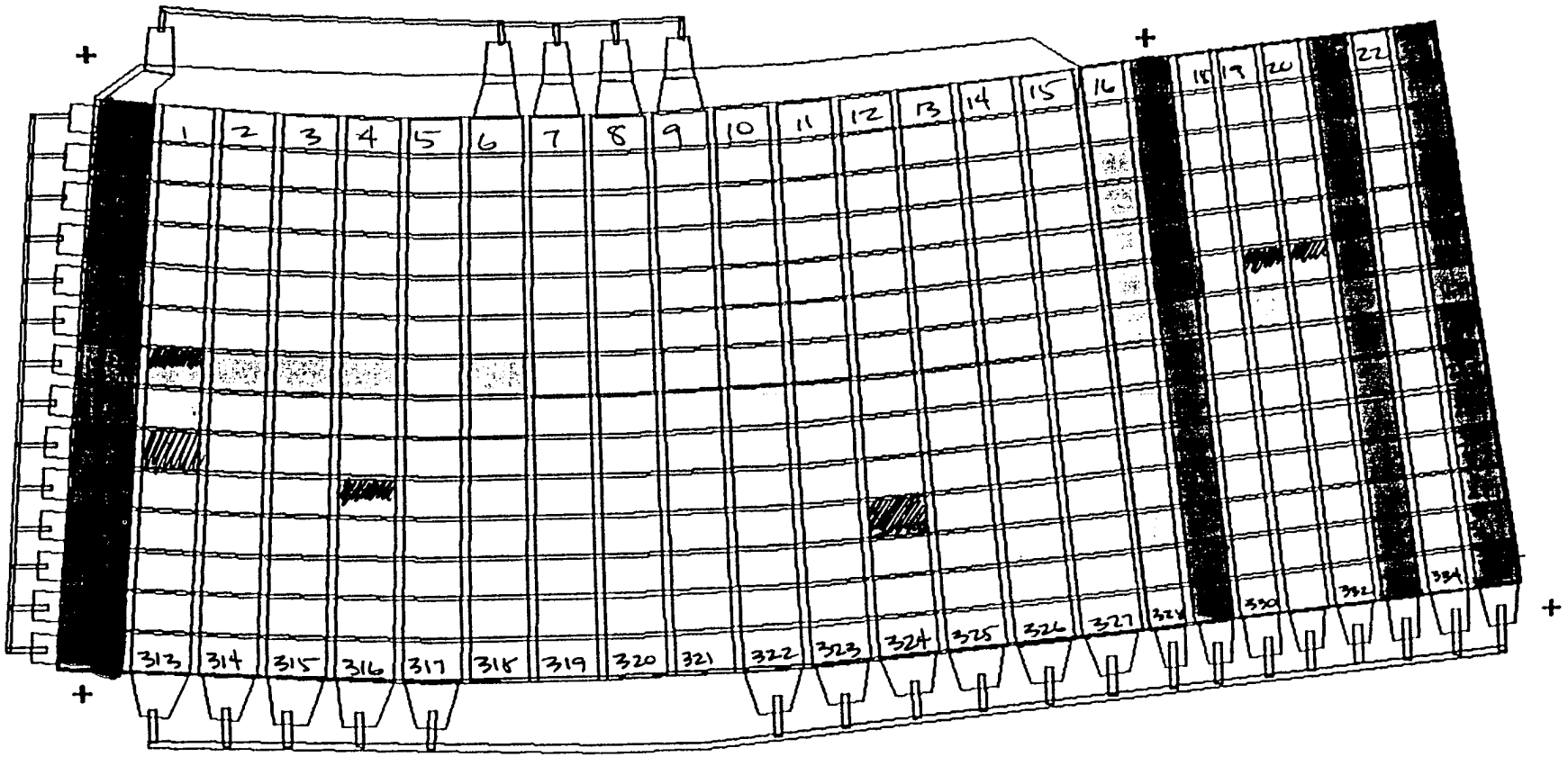

CAPACITANCE CHARACTERISTICS LOG

Sensor No. 4P

EXC RCN

REC COL

Element No.	Echo Ampl.	Noise Ampl	Notes
0	0		342
1	1		348
2	2		350
3	3		355
4	4		354
5	5		355
6	6		176 *
7	7		355
8	8		358
9	9		358
10	10		335
11	11		358
12	12		365
13	13		366
14			
15			
16			
17			
18			
19			
20			
21			
22			
23			
24			
25			
26			
27			
28			
29			
30			
31			

Element No.	Echo Ampl.	Noise Ampl.	Notes
32	0		666
33	1		658
34	2		655
35	3		662
36	4		662
37	5		660
38	6		1160
39	7		671
40	8		919
41	9		673
42	10		668
43	11		671
44	12		657
45	13		656
46	14		656
47	15		658
48	16		50 *
49	17		546
50	18		533
51	19		540
52	20		534
53	21		532
54	22		535
55	23		548
56			
57			
58			
59			
60			
61			
62			
63			

CHARACTERISTICS LOG

Sensor No. 4P

Element No.	Echo Ampl.	Noise Ampl	Notes
0 X			DEAD
1		—	
2		—	
3		—	CROSS
4		—	
5		—	
6		—	
7		—	
8		—	
9		—	
10		—	
11		—	
12		—	
13		—	
14		—	
15		—	
16		—	[illegible]
17 X			DEAD
18		—	
19		—	
20		—	
21 X			DEAD
22		—	[illegible]
23 X			DEAD
24 X			DEAD
25		—	
26		—	
27		—	
28		—	
29		—	
30		—	
31		—	

Element No.	Echo Ampl.	Noise Ampl.	Notes
32	—	—	
33	—	—	
34		—	
35		—	
36		—	
37		—	
38		—	
39		—	
40		—	
41 X			DEAD
42		—	
43		—	
44		—	
45			DEAD
46		—	
47			DEAD
48			DEAD
49		—	
50		—	
51		—	
52		—	
53		—	
54		—	
55		—	
56		—	
57		—	
58		—	
59		—	
60		—	
61		—	
62		—	
63		—	

Sensor No._____

Element No.	Echo Ampl.	Noise Ampl	Notes
64		+	
65		—	V.G.
66		—	
67		—	
68		—	
69			Dead
70		—	
71			Dead
72			Dead
73		—	
74		—	
75		—	
76		—	
77		—	
78		-	
79		—	
80		—	
81		—	
82		—	
83		—	
84		-	
85		-	
86		—	
87		—	
88		+	
89		—	VS
90		—	
91		—	
92		—	
93			Dead
94		—	
95		—	Dead
96			Dead

Element No.	Echo Ampl.	Noise Ampl.	Notes
97		—	
98		—	
99		—	
100		—	
101		—	
102		—	
103		—	
104		—	
105		—	
106		—	
107		—	
108		—	
109		—	
110		—	
111		—	
112		+	
113			Dead
114		—	
115		—	
116		—	
117			Dead
118		—	
119			Dead
120			Dead
121		—	
122		—	
123		—	
124		—	
125		—	
126		—	
127		—	
128		—	
129		—	

Sensor No._____

Element No.	Echo Ampl.	Noise Ampl	Notes
130		−	
131		−	
132		−	
133		−	
134		−	
135		−	
136		+	
137			Dead
138		−	
139		+	-.5V Pos @ 6μs
140		+	-.4V @ 6μs
141			~~4V~~ Dead
142		−	
143			Dead
144			Dead
145		+	.2V @ 4μs
146		+	
147		+	
148		+	
149		−	
150		+	
151		−	
152		−	
153		−	
154		−	
155		−	
156		−	
157		−	
158		−	
159		−	
160		−	
161		−	VS
162		−	

Element No.	Echo Ampl.	Noise Ampl.	Notes
163		−	
164		−	
165			Dead
166		−	
167			Dead
168			Dead
169		−	
170		−	
171		−	
172		+	
173		−	
174		−	
175		−	
176		−	
177		−	
178		+	
179		−	
180		−	
181		−	
182		−	
183		−	
184		−	
185		−	Dead
186		−	
187		−	
188		−	
189			Dead
190		−	
191			Dead
192			Dead
193		−	-3V Pos @ 4μs
194		−	
195		−	

Sensor No._____

Element No.	Echo Ampl.	Noise Ampl	Notes
196		+	
197		−	
198		−	
199		−	
200		−	
201		−	
202		−	
203		−	
204		−	
205		−	
206		−	
207		−	
208		−	
209			Dead
210		−	
211		+	
212		−	
213			Dead
214		+	
215			Dead
216			Dead
217		−	
218		−	
219		−	
220		+	.2V @ 4μs
221		−	
222		−	
223		−	
224		−	
225		−	
226		+	
227		−	
228		−	

Element No.	Echo Ampl.	Noise Ampl.	Notes
229		−	
230		−	
231		−	
232		−	
233			Dead
234		−	
235		−	
236		−	
237			Dead
238		+	
239			Dead
240			Dead
241		−	
242		+	
243		−	
244		−	
245		−	
246		+	
247		−	
248		−	
249		−	
250		−	
251		−	
252		−	.3V @ 4μs
253		−	
254		−	
255		+	
256		−	
257			Dead
258		−	
259		−	
260		−	
261			Dead

Sensor No. _____

Element No.	Echo Ampl.	Noise Ampl	Notes
262		—	
263		—	DEAD
264			DEAD
265		—	
266		—	
267		+	
268		—	
269		—	
270		+	
271		—	
272		—	
273		—	
274		—	
275		—	
276		+	
277		—	
278		—	
279		+	
280		+	
281			DEAD
282		—	
283		—	
284		—	
285			DEAD
286		—	
287			DEAD
288			DEAD
289		—	
290		—	
291		—	
292		—	
293		—	
294		—	

Element No.	Echo Ampl.	Noise Ampl.	Notes
295		—	
296		—	
297		—	
298		—	
299		—	
300		—	
301		—	
302		—	
303		—	
304		—	
305			DEAD
306		—	
307		—	
308		—	
309			DEAD
310		—	
311			DEAD
312			DEAD
313		—	
314		—	
315		—	
316		—	
317		—	
318		—	
319		—	
320		—	
321		—	
322		—	
323		—	
324		—	
325		—	
326		—	
327		—	

Sensor No._____

Element No.	Echo Ampl.	Noise Ampl	Notes
328		—	
329			Dead
330		—	
331		—	
332		—	
333			Dead
334		—	
335			Dead

Element No.	Echo Ampl.	Noise Ampl.	Notes

LOW CAPACITANCE

% acceptable = 263 × 100% = 16%

ECHO Z 20 VOLTS

[redacted] DEAD DOWN

[redacted] RESIDUAL

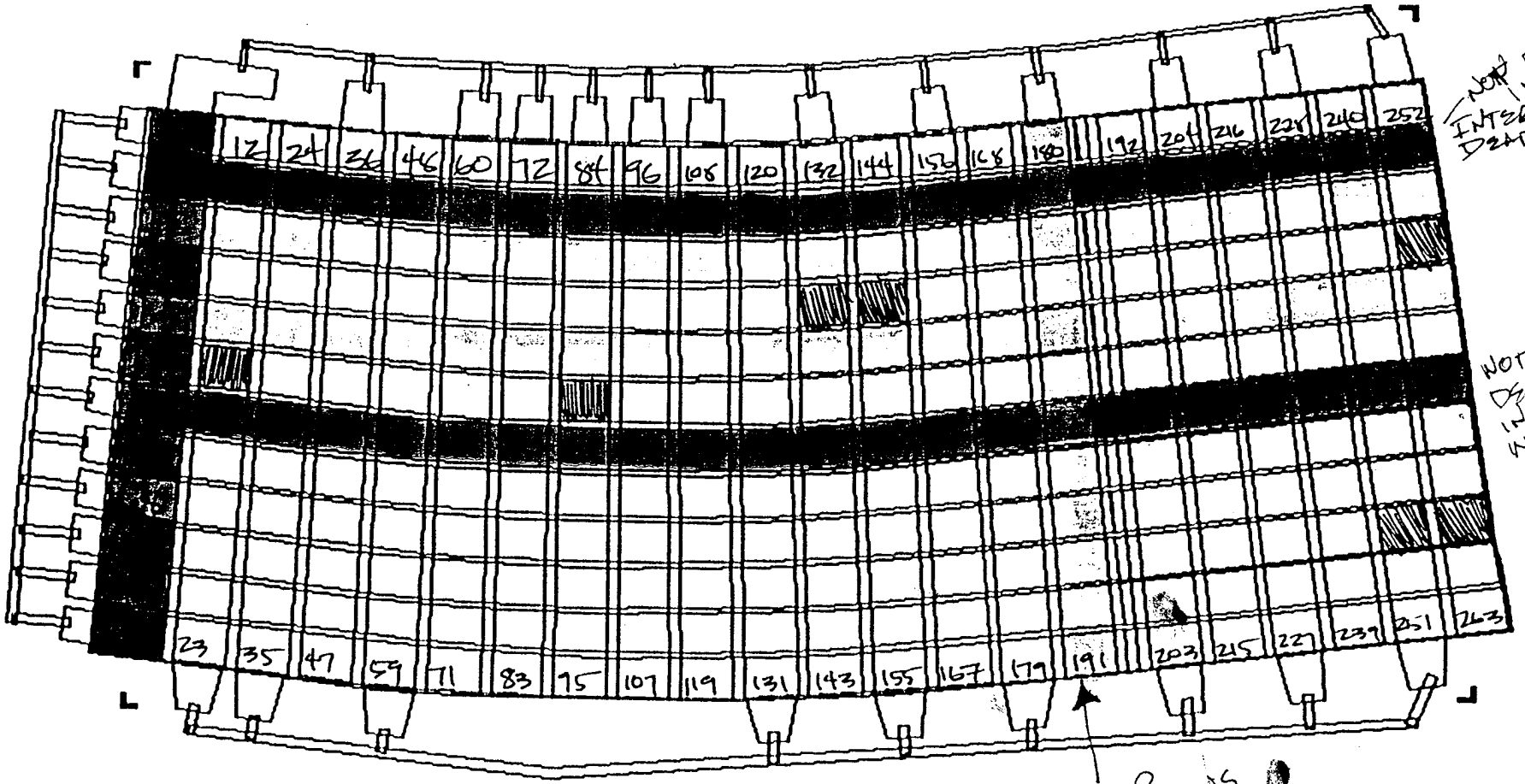

4M

CAPACITANCE

CHARACTERISTICS LOG

Sensor No. 4M

EXC COL

REC ROW

Element No.	Echo Ampl.	Noise Ampl	Notes
0	0		321
1	1		333 INTERMITENT
2	2		~~333~~ ~~333~~ 74
3	3		340
4	4		88
5	5		345
6	6		341
7	7		343
8	8		66
9	9		348
10	10		258
11	11		304 INTERMITT
12			
13			
14			
15			
16			
17			
18			
19			
20			
21			
22			
23			
24			
25			
26			
27			
28			
29			
30			
31			

Element No.	Echo Ampl.	Noise Ampl.	Notes
32	0		505
33	1		498
34	2		469
35	3		513
36	4		513
37	5		517
38	6		519
39	7		520
40	8		525
41	9		490
42	10		530 7
43	11		493
44	12		528
45	13		493
46	14		515
47	15		41
48	16		493
49	17		475
50	18		FLOATS 500≤X≤
51	19		473
52	20		470
53	21		490
54			
55			
56			
57			
58			
59			
60			
61			
62			
63			

CHARACTERISTICS LOG

* = THERE EFC PULSES EXTENDING OUT TO 22 μs

Sensor No. 4M.

Element No.	Echo Ampl.	Noise Ampl	Notes
0*			DEAD
1			
2*			
3*			
4			
5*			
6			
7*			
8			
9*			
10*			
11*			DEAD
12*		—	
13		—	DEAD
14*		—	DEAD INTERMITT
15*		—	L2
16		—	
17*		—	-.3V @ 3-4 μs
18		—	DEAD
19*		—	L2
20		—	DEAD
21*		—	
22*			DEAD INTERMITTENT
23*		—	
24*		—	
25		—	DEAD INTERMITTENT
26		—	DEAD INT
27*		—	
28		—	VERY SMALL
29*		—	
30		—	DEAD INT
31*		—	

Element No.	Echo Ampl.	Noise Ampl.	Notes
32		—	DEAD
33*		—	
34*		—	DEAD INT
35*		—	
36*		—	
37		—	DEAD INT
38		—	
39*		—	
40		—	
41*		—	
42		—	DEAD INT
43*		—	
44			DEAD INT
45*		—	
46*		—	
47*		—	
48*		—	
49			DEAD
50		—	
51*		+	
52		—	
53*		—	
54			DEAD
55*		—	
56		—	VISUAL
57*		+	
58*		+	
59*		+	
60*		—	
61			DEAD
62			DEAD INT
63*		—	

Sensor No._____

Element No.	Echo Ampl.	Noise Ampl	Notes
64		—	V Small
65*		+	
66			Dead
67*		+	
68		—	V.G.
69*		+	
70*		—	LR.
71*		—	LR
72*		—	
73		·	Dead
74		—	V.G.
75*		+	Hot
76		—	
77*		—	
78		—	Dead
79*		—	
80		—	
81*		+	
82*		+	
83*		+	
84*		—	Noise
85			Dead
86		—	V.G.
87*		—	
88		—	V.G.
89*		—	.5 Rec & Sus
90			Dead LR
91*		—	LR
92		—	V.G.
93*		+	
94*		+	LR
95*		+	
96*		+	

Element No.	Echo Ampl.	Noise Ampl.	Notes
97		—	Dead
98		—	V.G.
99*		—	LR
100		—	V.G.
101*		—	
102			Dead
103*		+	
104		—	V.G.
105*		+	
106*		+	LR
107*		+	
108*		+	
109			Dead
110		—	V.G.
111*		—	
112		—	V.G.
112*		—	
114			Dead
115*		—	
116		—	V.G.
117*		+	
118*		—	
119*		+	
120*		—	
121			Dead
122		—	V.G.
123*		+	
124		—	V.G.
125*		—	
126		—	Dead
127*		+	
128		—	V.G.
129*		+	

Sensor No._____

Element No.	Echo Ampl.	Noise Ampl	Notes
130*	—	—	CLOSE
131*		—	
132*		—	
133			DEAD
134		—	VS
135*		—	1 RES @ 7-8 μs
136		—	VS
137*		—	LR
138			DEAD
139*		+	LR
140		—	VS
141*		+	
142*		-	
143*		+	
144*		+	
145			DEAD
146			VS
147*		—	3 RES @ 7-8 μs
148		—	
149*		—	
150			DEAD
151*		—	
152		—	VS
153*		—	
154*		+	LR
155*		+	
156*		+	
157			DEAD
158		—	VS
159*		—	
160		—	SMALL
161*		—	
162			DEAD

Element No.	Echo Ampl.	Noise Ampl.	Notes
163*		—	
164		—	VS
165*		—	
166*		—	
167*		+	
168*		+	
169			DEAD
170		—	VS
171*		—	
172		—	
173*		—	
174			DEAD
175*		—	
176		—	VS
177*		—	
178*		+	
179*		+	
180*		+	
181			DEAD
182		—	VS
183*		—	LR
184		—	VS
185*		—	LR
186		-	DEAD
187*		+	LR
188		—	VS
189*		—	
190*		—	
191*		+	
192*		—	VS
193		—	DEAD
194			DEAD
195*		—	

Sensor No. _____

Element No.	Echo Ampl.	Noise Ampl	Notes
96		—	V.G.
97*		—	VS
98		—	DEAD
99*		—	VS
200		—	DEAD
201*		—	VS
202*		—	VS
203*		—	VS
204*		—	
205		—	DEAD
206			DEAD
207*		—	
208		—	VS
209*		—	
210		—	DEAD
211*		—	
212		—	DEAD
213*		—	
214*		—	
215*		—	
216	?	—	VS / DEAD
217			DEAD
218			DEAD
219*		—	VS
220			DEAD
221* INT		—	VS
222			DEAD
223* INT		—	VS
224		—	DEAD
225* INT		—	VS
226		—	VS / DEAD
227*		—	VS
228*		—	

Element No.	Echo Ampl.	Noise Ampl.	Notes
229			DEAD
230		—	VS
231*		+	
232		—	
233*		—	
234			DEAD
235*		—	
236		—	VS
237*		—	
238*		—	
239*		—	
240*		—	RINGING 22KHz
241			DEAD
242			VS, RINGING
243*		—	RINGING
244		—	VS RING
245*		—	RING
246			DEAD
247*		—	
248		—	VS
249*		—	-.3V RES @ 4mm
250*		—	
251*		—	RING
252*		—	
253		—	DEAD
254		—	VS
255*		—	-.2V RES @ 3mm
256		—	VS
257*		—	CROSS
258			DEAD
259*		—	
260		—	VS
261*		—	-.25V RES @ 4mm
262		—	
263*		—	

ORIGINAL

= LOW CAPACITANCE

= ECHO ≥ 20 VOLTS

= DEAD ROW

= RESIDUAL

% acceptable = $\frac{49}{195}$ × 100% = 25%

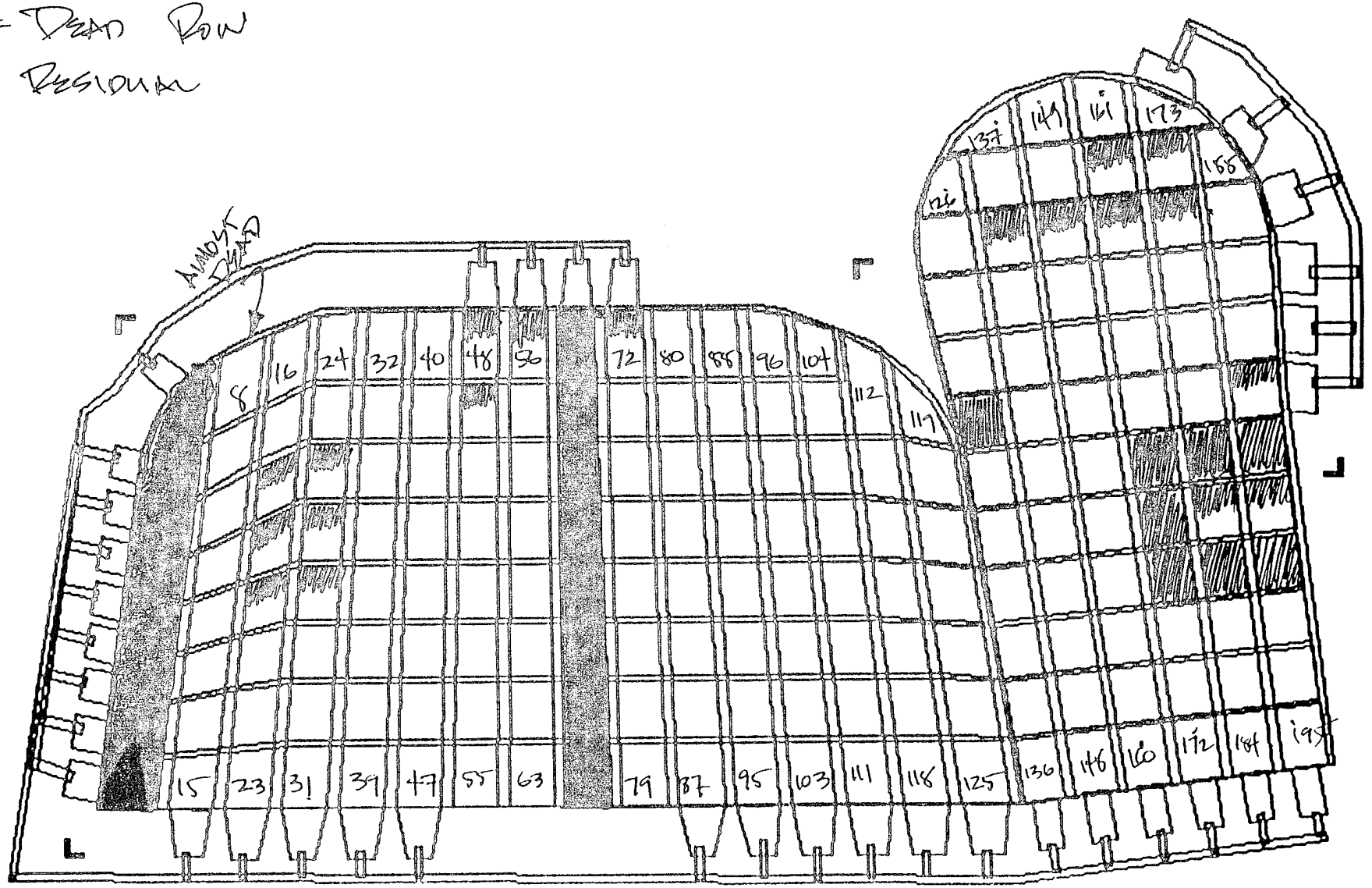

111

4D

CAPACITANCE

CHARACTERISTICS LOG

EXC COL

Sensor No. 4D.

REC ROW

Element No.	Echo Ampl.	Noise Ampl	Notes
0	0		98
1	1		163
2	2		175
3	3		177
4	4		362
5	5		365
6	6		360
7	7		372
8	8		354
9	9		386
10	10		380
11	11		393
12			
13			
14			
15			
16			
17			
18			
19			
20			
21			
22			
23			
24			
25			
26			
27			
28			
29			
30			
31			

Element No.	Echo Ampl.	Noise Ampl.	Notes
32	0		66 *
33	1		489
34	2		482
35	3		493
36	4		509
37	5		505
38	6		517
39	7		519
40	8		446
41	9		447
42	10		453
43	11		520
44	12		486
45	13		529
46	14		457
47	15		457
48	16		634
49	17		757
50	18		763
51	19		758
52	20		737
53	21		720
54			
55			
56			
57			
58			
59			
60			
61			
62			
63			

CHARACTERISTICS LOG

Sensor No. 4D

Element No.	Echo Ampl.	Noise Ampl	Notes
0			DEAD
1			
2			
3			
4			
5			
6			
7			DEAD
8			NO ECHO
9			" NO ECHO
10			" "
11			" "
12			"
13			"
14			"
15			"
16		—	
17		—	
18		+	-.3V @ 4μs
19		+	-.5V @ 4μs
20		+	-.3V @ 4μs
21		+	
22		+	
23		—	
24		—	
25		+	
26		+	-.25V @ 4μs
27		+	-.25V @ 4μs
28		+	-.25V @ 4μs
29		+	
30		—	
31		—	

Element No.	Echo Ampl.	Noise Ampl.	Notes
32		—	
33		+	
34		—	
35		+	
36		+	
37		+	
38		—	
39		—	
40		—	
41		—	
42		—	
43		—	
44		+	
45		—	
46		—	
47		—	
48		+	-.5V @ 3μs
49		+	-.25V @ 3μs
50		—	
51		—	
52		—	
53		—	
54		—	
55		—	
56		+	-.3V @ 3μs
57		—	
58		—	
59		—	
60		—	
61		+	
62		—	
63		—	

Sensor No._____

Element No.	Echo Ampl.	Noise Ampl	Notes
64			Dead
65			
66			
67			
68			
69			
70			
71			Dead
72		+	-.3V @ 3 µs
73		-	
74		—	
75		—	
76		+	
77		+	
78		—	
79		—	
80		—	
81		—	
82		—	
83		—	
84		—	
85		+	
86		—	
87		—	
88		—	
89		—	
90		—	
91		—	
92		—	
93		—	
94		—	
95		—	
96		—	

Element No.	Echo Ampl.	Noise Ampl.	Notes
97		—	
98		—	
99		—	
100		—	
101		—	
102		—	
103		—	
104		—	
105		±	
106		+	
107		—	
108		—	
109		—	
110		—	
111		—	
112		+	
113		+	
114		—	
115		—	
116		—	
117		—	
118		—	
119		+	
120		—	
121		—	
122		—	
123		—	
124		—	
125		—	
126		—	Very small
127		—	" "
128		—	
129		—	Very small

Sensor No._____

Element No.	Echo Ampl.	Noise Ampl	Notes
130		−	.25V @ 3μs
131		−	
132		−	
133		−	
134		−	
135		−	
136		−	
137		−	Very small
138		−	
139		+	.25 @ 3V
140		−	
141		−	
142		−	
143		−	
144		−	
145		−	
146		−	
147		−	
148		−	
149		−	Very small
150		+	
151		+	.3V @ 2.5-4
152		+	
153		−	
154		−	
155		−	
156		−	
157		−	
158		−	
159		−	
160		−	Very Small
161		−	" "
162		+	.4V @ 4μs

Element No.	Echo Ampl.	Noise Ampl.	Notes
163		+	.2V @ 4μs
164		+	
165		+	
166		+	
167		−	.3V @ 4μs
168		−	.4V @ 4μs
169		−	.3V @ 4μs
170		−	
171		−	
172		−	Very small
173		−	Ringing also
174		+	.5V @ 4μs
175		+	.3V @ 4μs
176		+	
177		+	
178		+	
179		−	.4V @ 4μs
180		+	.4V @ 4μs
181		−	3V @ 4μs
182		−	
183		−	
184		−	
185		−	
186		+	
187		+	
188		−	
189		+	.4V @ 3μs
190		−	.5V @ 4μs
191		+	.5V @ 4μs
192		−	.3V @ 4μs
193		−	
194		−	
195		−	Very small

THIS PAGE

INTENTIONALLY

LEFT BLANK

TEST RESULTS FOR

DIGIT 2

ORIGINAL

-2 P-

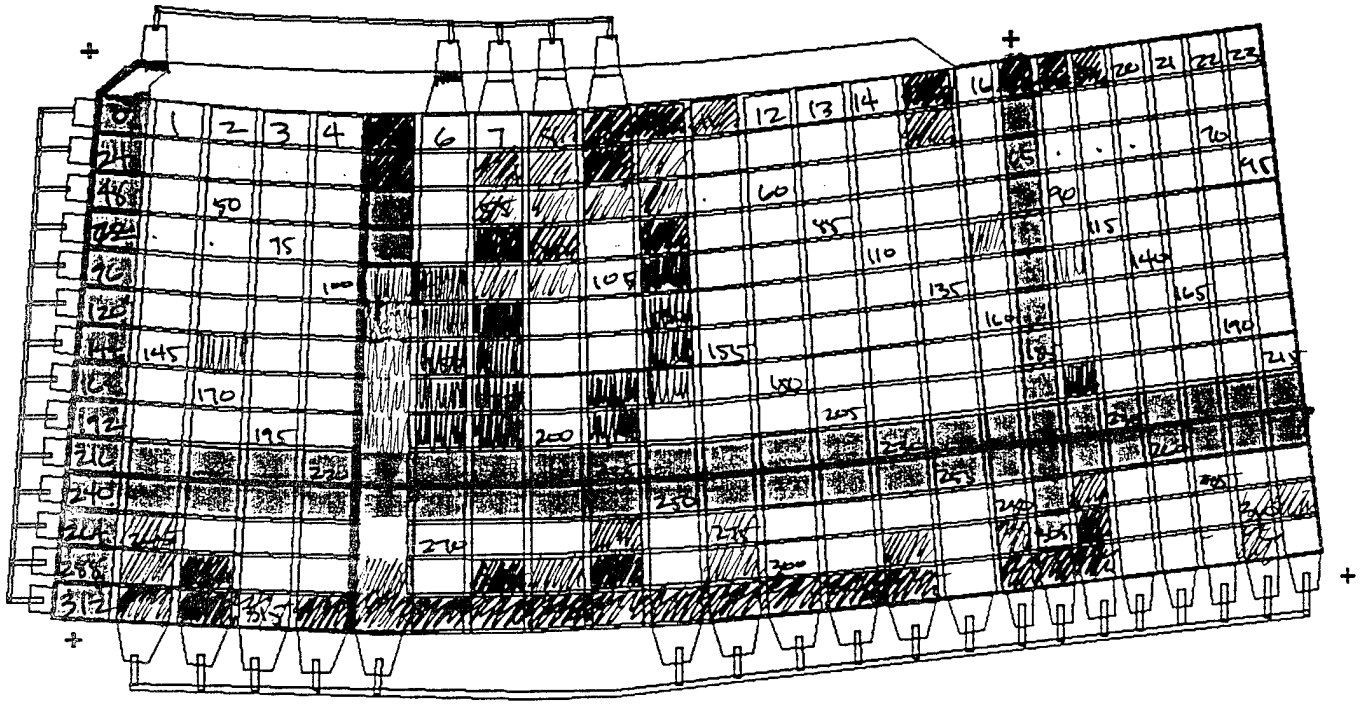

— LOW CAPACITANCE

— NON FUNCTIONING

— RUBBER

AF5.TXT

AF5_ADDR.TXT

CAPACITANCE

Sensor No. 2P

EXC. ROW

~~Element~~ No.	Echo Ampl.	Noise Ampl	Notes
13			465 pF
12			498 pF
11			486 pF
10			53 pF
9			56 pF
8			488 pF
7			481 pF
6			493 pF
5			482 pF
4			480 pF
3			479 pF
2			470 pF
1			469 pF
0			469 pF

EXC. COLUMN

~~Element~~ No.	Echo Ampl.	Noise Ampl.	Notes
0			1436
1			1370
2			1380
3			1420
4			1426
5			1401
6			~~1500~~ 1477
7			~~1500~~ 1498
8			~~1500~~ 1504
9			1483
10			1414
11			1436
12			1420
13			1421
14			1407
15			1412
16			1002
17			958
18			913
19			940
20			920
21			916
22			922
23			955

Average Echo Amp.: 1.13V ; MAX = 2.22V ; MIN = 0V
Average noise amp: 0.32V ; MAX = 0.79V ; MIN = 0.24V
Ave Sig-noise: $\frac{1.13}{0.32}$ = 3.5

BLUE 2 PLANAR ARRAY

CHARACTERISTICS LOG

Sensor No. 2P

ECHO MUST BE ~1.0V TO BE DETECTABLE

Element No.	Echo Ampl.	Noise Ampl	Notes
0			NO ECHO
1	1.07	.42	SINGLE UP DOWN TYPE W/A
2	1.05	.41	DOUBLE DOWN SINGLE UP TYPE
3	1.59	.41	B/C
4	1.41	.41	" " C SOME ANT. IN REAR
5	.48	.36	VERY SMALL ALMOST NONEXISTANT
6	1.60	.30	C
7	.96	.27	C
8	.66	.28	TOO SMALL A
9	.48	.28	VERY SMALL A
10	.55	.28	TOO SMALL TYPE A
11	.71	.28	TOO SMALL ON - SIDE A
12	1.98	.36	HUGE (-) GOOD C
13	1.60	.36	" " GOOD C
14	1.07	.27V	JAGGED LEADING - EDGE C
15	.61	.36	NEG. INTERFERENCE A.C
16	1.50	.37	GOOD B.C
17	.39	.37	D ALMOST NO SIGNAL X TALK?
18	.39	.37	D X-TALK?
19	.66	.37	A "
20	.98	.41	AD "
21	1.06	.40	D "
22	1.04	.40	D "
23	1.03	.40	D "
24			NO SIGNAL
25	1.45	.39	GOOD B.C
26	1.20	.30	" " B.C
27	1.24	.32	" " B.C
28	1.35	.29	" " B.C
29	.49	.24	NO GOOD A
30	1.82	.24	GOOD C.B
31	.68	.30	POSSIBLY FUNCTIONAL A

IS ROW ON PLANAR ARRAY BARELY HAD ANY RESPONSE DESPITE FAIR SIGNAL SIZE MOSTLY X-TALK?

BLOCK ROW DEAD?

Element No.	Echo Ampl.	Noise Ampl.	Notes
32	.79	.28	NOT CLEAN ECHO A
33	.55	.30	NO DETECTABLE ECHO A
34	.66	.30	LOOKED LIKE TYPE A BIG NOISE
35	.96	.33	OK C
36	1.25	.31	" " C
37	1.55	.31	" " C
38	.85	.36	PASSABLE ? C SOME A
39	1.21	.35	OK C/A
40	1.60	.35	C.B
41			D NOISE LEVEL ONLY
42	1.03	.29	OK B.C
43	1.17	.29	OK B.C
44	1.71	.28	GOOD B.C
45	1.44	.28	GOOD C.B
46	1.57	.25	GOOD B
47	1.57	.25	" " B
48			NO SIGNAL
49	1.34	.47	GOOD C.B
50	1.19	.33	OK C.B
51	1.56	.33	GOOD C.B
52	.90	.36	OK ? C
53	.55	.32	LOOKS LIKE BIG NOISE DENSI. INTERFERENCE TO RMSE
54	1.77	.30	GOOD C
55	.70	.37	TYPE A
56	.72	.37	TYPE A
57	.79	.37	TYPE A
58	.79	.37	A
59	1.53	.30	B TO C
60	1.52	.30	C
61	1.65	.30	C
62	.95	.30	C.A
63	2.03	.30	B.C

Sensor No. 2.P.

Element No.	Echo Ampl.	Noise Ampl	Notes
64	1.43	.34	C
65	.57	.33	A
66	1.14	.33	C
67	1.37	.30	B
68	2.07	.30	B
69	2.07	.30	B
70	1.95	.30	B
71	1.86	.30	B
72			No Signal
73	1.15	.43	C
74	1.00	.46	C/A
75	1.72	.30	B/C
76	1.20	.30	C
77	.59	.30	A
78	1.27	.30	C/A
79	.46	.30	A
80	.69	.30	A
81	1.21	.30	C
82	.62	.30	A
83	2.17	.30	C/B
84	1.54	.30	C
85	1.88	.30	C
86	.92	.30	C/A
87	1.70	.30	C/B
88	1.32	.30	C
89	.43	.30	D
90	1.04	.35	C
91	1.07	.35	C
92	2.04	.30	B
93	2.04	.30	B
94	2.07	.30	B
95	1.57	.35	B/C
96			No Signal

Element No.	Echo Ampl.	Noise Ampl.	Notes
97	1.22	.31	C
98	.96	.31	B/C
99	2.11	.44	C/B Noise @ 2-3 us
100	1.35	.26	C
101	.73	.28	C/A
102	.80	.30	C/A
103	.46	.30	C
104	.52	.30	C/A
105	1.73	.30	C/B
106	.50	.30	A
107	2.03	.36	B/C
108	1.84	.26	B
109	.92	.26	B/C
110	.94	.26	C
111	1.71	.30	C
112	1.25	.30	D
113	.52	.30	A/C End element couldn't isolate ech
114	.94	30	C
115	98	.30	C
116	1.84	.42	B
117	1.90	.42	B
118	1.94	.42	B
119	1.77	.46	B
120			No Signal
121	1.46	.34	Faint Noisy C
122	1.00	.34	" " C
123	2.08	.34	" " B
124	1.52	.32	B
125	.65	.31	A
126	.65	.46	A Noisy
127	.52	.42	A
128	1.20	.34	B
129	1.86	.34	B

Sensor No. ZP

Element No.	Echo Ampl.	Noise Ampl	Notes
30	.75	40	A
31	1.78	.37	C
32	1.86	.30	C/B
33	1.52	.30	C/B
34	1.16	.30	C
35	1.63	.30	C
36	1.52	.30	C
37	.47	.36	D
38	.53	.40	A
39	1.15	.43	C/A
40	1.89	.43	B/C
41	1.89	.43	B/C
42	1.92	.30	B
43	1.94	.38	B
144			No Signal
45	1.27	.30	C
46	.79	.38	A
47	1.70	.32	B
48	1.60	.31	C
49	.76	.47	A
50	1.62	.38	A
51	.65	.36	A
152	1.62	.30	C
53	.95	.30	C
54	.58	.30	A
155	2.04	.26	C
156	1.89	.26	C
157	2.20	.26	C
158	1.77	.30	C
159	1.64	.30	C
160	1.45	.26	C
161	.35	.26	A or D
162	.85	.26	A
163	1.47	1.25	B
164	2.02	.66	STRANGE PHANTOM ECHO VANISHES W/ TOUCH OF FORCE
165	1.74	1.41	~
166	1.92	.30	B
167	1.55	.28	B
168			No Signal
169	1.36	.45	VERY NOISY LOW FREQ C
170	.93	.39	LFO C
171	1.25	.37	LFO C
172	1.57	.38	LFO B/C
173	1.45	.40	LFO A
174	.66	.40	A LFO
175	.62	.30	A
176	1.89	.31	C
177	.59	.31	A
178	.59	.31	C
179	1.77	.31	C
180	1.84	.26	C
181	2.06	.30	C
182	1.29	1.25	C
183	1.46	.28	C
184	1.19	1.35	C
185	.57	.36	D
186	~~.94~~	.36	C
187	1.61	.37	C/B
188	2.06	.67	PHANTOM ECHO C/B
189	1.97	.66	PHANTOM ECHO 47ms C/B
190	1.55	.34	LFO B
191	1.72	.34	LFO B
192			No Signal
193	~~1.49~~	.79	PHANTOM ECHO C
194	1.55	.49	B PHANTOM?
195	1.26	.28	B

Sensor No._____

Element No.	Echo Ampl.	Noise Ampl	Notes
196	1.53	.28	B
197	63	.28	A
198	.58	.3	A
199	.53	.30	A
200*	2.10	.61	PHANTOM ECHO
201	.62	.25	A
202	1.64	.27	C
203	1.95	.29	C
204	2.09	.29	C
205	2.09	.27	C
206	2.22	.28	C
207	.98	.24	C
208	1.47	.24	C
209	.39	.38	D
210	.84	.25	C/A
211	1.45	.33	C
212	1.84	.37	LED C
213	2.44	.35	B/C
214	1.58	.35	C
215	1.32	.31	B
216		[illegible]	NO ECHO
217		.28	DEAD SOCKET
218			NOISE ~.30 ✓
219			
220			
221			
222			DEAD
223			
224			
225			
226			
227			
228			

Element No.	Echo Ampl.	Noise Ampl.	Notes
229			
230			
231			DEAD
232			DEAD
233			DEAD
234			
235			
236			
237			
238			
239			
240			NO ECHO
241	.39	.25	DEAD
242		.25	
243			
244			
245			
246			
247			
248			
249			
250			
251			
252			
253			
254			
255			
256			
257			
258			
259			
260			
261*			

Sensor No._____

Element No.	Echo Ampl.	Noise Ampl	Notes
62			
63			
64			No Signal
265	.78	.27	A
266	1.29	27	B
267	1.25	.26	B
268	1.21	.26	B
269	1.21	26	C
270	2.21	.47	C Strange Noise Pulse @ 4 μs Doesn't Move
271	1.06	.26	B
272	1.48	.26	~~B~~ B
273	.53	.26	A
274	1.09	.26	B
275	.84	.26	C
276	1.50	.38	C
277	1.61	.28	C
278	1.01	.25	C
279	1.46	.25	C
280	1.13	.25	C
281	.46	.25	D
282	.56	.25	A
283	.94	.25	C
284	1.16	.25	C
285	1.16	.25	C
286	1.42	.25	~~E~~ B
287	1.46	.25	B
288			No Signal
289	.74	.38	A/D
290	.46	.26	A
291	1.00	.26	C
292	1.06	.26	B
293	.62	.25	A
294	1.03	.39	Same C Noise as 270

Element No.	Echo Ampl.	Noise Ampl.	Notes
295	.57	.29	A
296	.72	.26	A
297	.37	.25	A
298	.89	.25	C
299	.72	.25	A
300	1.11	.25	C
301	.95	.25	B
302	.76	.25	A
303	.95	.25	C
304	.80	.25	C
305	.30	.25	D Can make this col work by just light press
306	.30	.25	A
307	.84	.25	C
308	1.00	.25	C
309	1.09	.25	C
310	.88	.25	C
311	.75	.25	C
312	~~[illegible]~~	.	No Signal
313	.66	.26	A
314	.53	.26	A/~~E~~
315	.81	.26	C
316	.56	.28	~~E~~/A
317	.31	.28	A - Severe
318	.31	.30	D
319	.31	.30	D
320	.38	.30	D
321	.31	.30	D
322	.56	.30	A
323	.38	.30	A
324	.40	.30	A
325	.62	.30	A
326	.49	.30	A
327	1.06	.50	~~E~~ A

Sensor No._____

Element No.	Echo Ampl.	Noise Ampl	Notes
328	.55	.24	A
329	.24	.24	D/A
330	.30	.24	D
331	.84	.25	C
332	.91	.26	C/B
333	.87	.24	B/C
334	.64	.25	C
335	.88	.25	C

Element No.	Echo Ampl.	Noise Ampl.	Notes

ORIGINAL

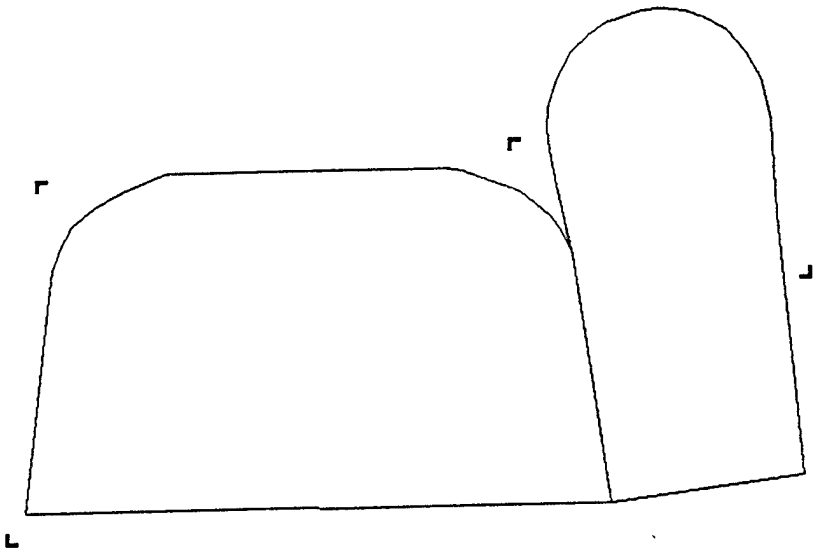

- CERAMIC - IE. LOCATION & RUBBER.
- RUBBER

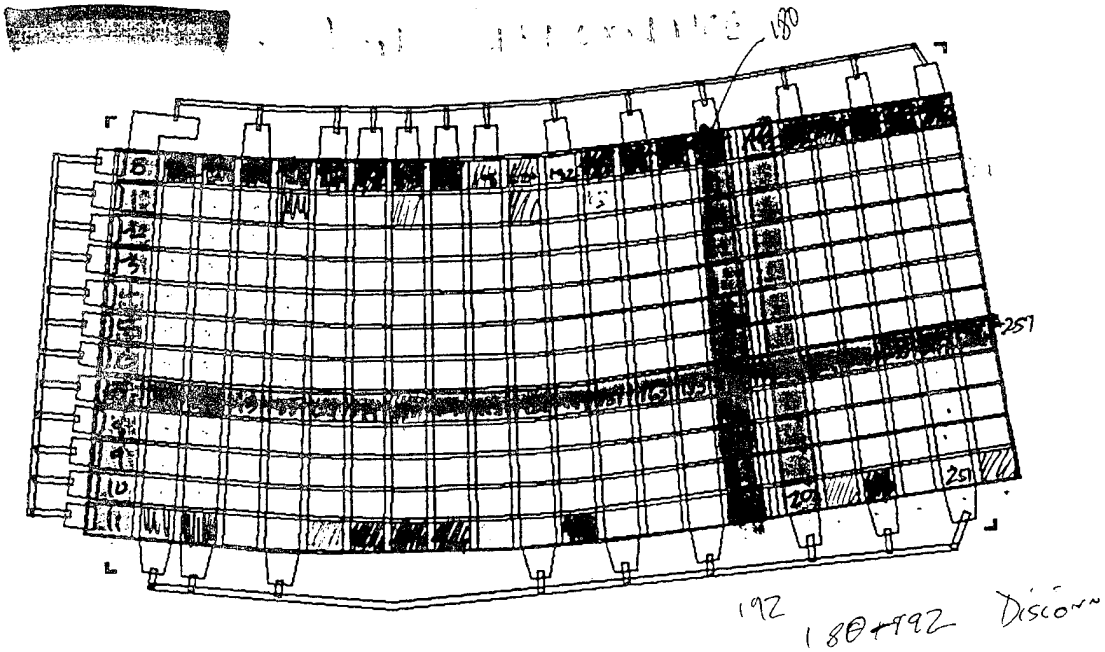

AF 2.TXT
AF2_ADDR.TXT

CAPACITANCE

EXC ROW

Element No.	Echo Ampl.	Noise Ampl	Notes
0			328
1			358
2			349
3			350
4			360
5			360
6			357
7			78
8			365
9			362
10			354
11			370

Sensor No. 2M

EXC COL

Element No.	Echo Ampl.	Noise Ampl.	Notes
0			980
1			738
2			739
3			751
4			758
5			757
6			743
7			740
8			754
9			742
10			786
11			782
12			784
13			772
14			785
15			70
16			760
17			738
18			726
19			740
20			730
21			777
[redacted]			

Ave echo Amp: 1.39V ; Max Echo Amp: 2.02
Ave noise Amp: 0.28V ; Average [illegible] Echo Amp: = 1.47V
Max noise Amp: 0.92V
Min " " : 0.16V

CHARACTERISTICS LOG

Ave. Sig to noise ratio: 5:1
Min " : 0:1
Max " : 11:1

Sensor No. 2M

Element No.	Echo Ampl.	Noise Ampl	Notes
0			DEAD – VERY SMALL SOMETHING
1			" SOME SORT OF "
2			" X-TALK THAT WILL "
3			" MOVE BUT IS "
4			TOO SMALL TO ~~[illegible]~~
5			PICK UP.
6			" "
7			NOTHING
8			SAME AS 0-6
9	.21	~~[illegible]~~	" "
10	.21	~~[illegible]~~	" "
11			" "
12	.32	.26	D - TERMINALLY SMALL
13	1.13	.24	B
14	1.20	.24	C RESIDUAL ECHO - 2-3μs VERY SMALL
15	1.10	.24	C RESIDUAL ECHO
16	1.25	.34	C ~~[illegible]~~ RESIDUAL ECHO
17	1.19	.34	C " "
18	1.25	.29	B RESIDUAL
19	.29	.29	D ~~DEAD~~ VERY SMALL (NOISE LEVEL) ECHO
20	1.41	.25	B RESIDUAL
21	1.75	.62	B LG RES.
22	1.81	.33	B RES
23	.88	.22	C NOISE LVL RESIDUAL
24	.76	.24	B " "
25	1.40	.24	B " "
26	1.17	.22	B
27	1.12	.22	C
28	1.16	.22	C
29	1.27	.23	B
30	1.64	.31 RES	B CLEAN XCPT RES
31	.29	.23	D

Element No.	Echo Ampl.	Noise Ampl.	Notes
32	1.97	.45 RES	B CLEAN EXCPT RES
33	1.51	.23	B
34	1.48	.23	B
35	.96	.23	~~B~~ C/A
36	.67	.23	C/A
37	.88	.23	C
38	1.13	.23	B
39	1.54	.23	B
40	1.62	.23	B
41	1.58	.25	B
42	1.85	.25	B
43	.25	.23	D
44	2.17	.32	LFO 1-3μs B
45	2.34	.75 RES	B
46	2.17	.28	B
47	1.18	.23	B
48	.43	.23	~~B~~ A
49	.80	.23	A/C
50	1.01	.23	C
51	1.54	.23	B
52	1.75	.23	B
53	2.23	.23	B
54	2.20	.23	B
55	.25	.23	D
56	1.71	.23	B
57	2.06	.23	B
58	2.16	.44 RES	B
59	1.97	.33 RES	B
60	.41	.23	A/C INTER
61	1.02	.23	C
62	.86	.23	C
63	.98	.23	C

Sensor No._____

Element No.	Echo Ampl.	Noise Ampl	Notes
54	1.13	.23	B/C
55	1.26	.23	B
56	1.57	.23	B
57	.24	.23	D
58	1.57	.23	B
59	1.99	.23	B
70	2.15	.23	B
71	2.21 .29	.64 RES .23	INTERMITTENT B CONNECTION A
72	1.55	.23	TERMINALLY SMALL ROW A
73	1.45	.25	B
74	2.22	.24	B RES
75	1.95	.33 RES	B
76	1.67	.33 RES	B
77	1.45	.45 RES	C
78	1.29	.24	C
79	.24	.23	INTERMIT SMALL D
80	1.30	.23	C
81	1.60	.23	C
82	1.82	.23	C
83	.24	.23	D
84	.62	.23	A
85	.82	.23	A
86	1.53	.23	C
87	2.19	.23	C
88	2.49	.74 RES	C
89	2.52	.61 RES	C
90	2.50	.61 RES	C
91	.86	.23	C
92	2.47	.60 RES	C
93	2.47	.35 RES	C
94	2.31	.23	C
95	.28	.23	D
96	.38	.23	A/D

Element No.	Echo Ampl.	Noise Ampl.	Notes
97	1.26	.23	C
98	1.58	.23	C
99	1.72	.22	C
100	1.35	.38 RES	C
101	1.13	.44 RES	C
102	.30	.23	C
103	.51	.23	A/D
104	2.28	.23	C
105	2.25	.23	C
106	1.43	.23	C
107	——	——	D
108	.80	.22	A/D
109	1.53	.23	C
110	1.96	.23	C
111	2.30	.23	C
112	1.81	.23	C
113	1.80	.23	B
114	2.29	.23	C
115	.51	.26	D
116	2.55	.25	C
117	2.50	.25	C
118	1.39	.25	C
119	.89 .41	.24	D INTERMITENT SHORT? A
120	.80	.24	D
121	.83	.24	D
122	1.79	.24	C
123	2.31	.24	C RES
124	2.31	.43 RES	C
125	2.47	.38 RES	C
126	2.25	.33 RES	C
127	.41	.24	D
128	2.35	.49 RES	C
129	2.52	.39 RES	

Sensor No._____

Element No.	Echo Ampl.	Noise Ampl	Notes
130	2.25	.24	C
131	1.46	.24	C
132	1.08	.29	RES C
133	1.50	.34	LFO C
134	2.14	.34	RES C
135	2.00	.28	C
136	1.82	.26	C
137	1.90	.25	C
138	1.59	.32	RES C
139	.26	.25	D
140	2.09	.74	MAJOR RESIDUAL B
141	2.59	.165	" " C
142	2.22	.32	C RES
143	164	.26	A & D
144	.885	.26	A & D
145	1.00	.26	B
146	1.52	.126	C
147	2.28	.26	C
148	2.29	.26	C
149	2.52	.26	C
150	2.24	.26	C
151	.28	.26	D
152	1.89	.126	C
153	2.20	.133	RES C
154	2.40	.139	RES C
155	1.37	161	MAJOR RES C
156	163	.24	D & A
157	1.90	.126	C
158	2.34	.26	C
159	2.29	.26	C
160	2.56	.26	C
161	2.29	.26	C
162	2.45	.28	C

Element No.	Echo Ampl.	Noise Ampl.	Notes
163	30	26	D
164	2.33	.26	C NO JITTER
165	2.10	.26	C " "
166	2.13	.26	C
167	2.05	45	RES C
168	.57	.26	D
169	1.71	.26	C
170	2.47	.26	C
171	2.52	.26	C
172	2.57	.26	C
173	2.57	.26	C
174	2.55	.26	C
175	.42	.26	D
176	1.89	126	B
177	1.99	.126	C
178	1.96	.26	C
179	1.96	.126	C
180	44	.26	D
181	1.68	26	C
182	2.43	26	C
183	2.31	.26	B
184	2.42	26	C
185	2.55	.26	RES C
186	2.57	.26	RES C
187	.28	.26	D
188	2.16	.26	C
189	2.40	.26	C
190	1.72	128	LFO C
191	1.38	137	RES C
192	.87	.26	D
193	26	26	D
194	.89	.26	D
195	184	128	A

Sensor No. 2M

Element No.	Echo Ampl.	Noise Ampl	Notes
96	.37	.18	D
97	.26	.16	D
98	.26	.16	D
99	.17	.16	D
200	.17	.16	D
201	.25	.16	D
202	.20	.16	D
203	.17	.16	D
204	.23	.23	D
205	.99	.23	C
206	1.15	.23	C
207	1.20	.23	C
208	1.14	.23	C
209	1.07	.23	C
210	1.22	.18	C
211	.15	.18	D
212	1.06	.19	C
213	1.11	.25	RES C
214	1.11	.20	B
215	.85	.27	C/D
216	.29	.23	D
217	.97	.17	B/D
218	1.72	.20	B
219	1.46	.18	B
220	1.27	.18	B
221	1.37	.18	B
222	1.35	.18	B
223	.20	.18	D
224	1.09	.21	B
225	1.23	.28	RES B
226	1.23	.35	RES B
227	.46	.23	RES A - RUBBER
228	.32	.30	D

Element No.	Echo Ampl.	Noise Ampl.	Notes
229	1.49	.20	B
230	2.38	.20	B
231	2.27	.20	B
232	2.06	.20	B
233	1.34	.22	LRO C
234	1.72	.21	B
235	.22	.22	D
236	1.59	.30	RES B
237	1.37	.50	RES B
238	1.44	.68	LG RES B
239	.95	.20	RES C
240	.39	.28	D & A RUBBER & CRACK
241	1.37	.25	B
242	2.09	.40 ECHO	B
243	2.29	.44	RES B
244	2.36	.37	RES C
245	2.19	.25	B
246	2.22	.25	C
247	.25	.25	D
248	2.17	.28	B
249	2.49	.40	RES C
250	2.50	.92	LG RES C
251	1.26	.40	LG RES C
252	.29	.125	D
253	1.24	.23	B NO JITTER
254	2.02	.25	B
255	2.16	.23	B
256	2.19	.23	C
257	1.99	.26	B
258	1.66	.26	B
259	.26	.26	D
260	1.59	.35	RES B
261	1.31	.51	RES B
262	1.18	.81	LG RES C
263	.46	.25	D

ORIGINAL

-2 D-

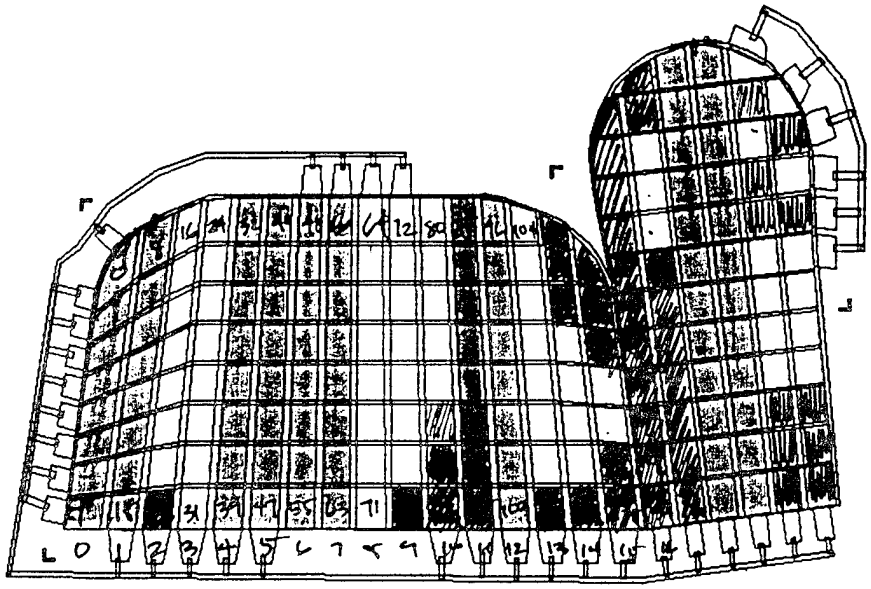

[redacted] - [illegible]

[redacted] - RUBBER EFFECT

[redacted] - CHROME

[redacted] - [illegible]

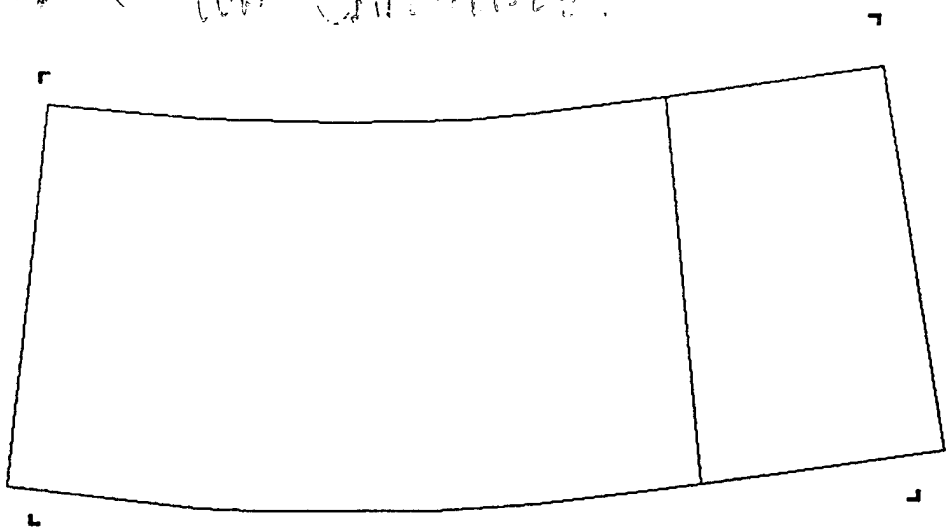

AF.TXT

AF_ADDR.TXT

CAPACITANCE

EXC DOWN

~~Element~~ No.	Echo Ampl.	Noise Ampl	Notes
0			148
1			171
2			179
3			180
4			375
5			373
6			368
7			366
8			366
9			366
10			~~5~~ 378
11			395

Sensor No. 2D

REC COL

~~Element~~ No.	Echo Ampl.	Noise Ampl.	Notes
0			557
1			539
2			535
3			545
4			554
5			555
6			563
7			561
8			566
9			567
10			568
11			70
12			560
~~13~~ 13			583
14			600
15			567
16			~~4444~~ 788
17			801
18			815
19			826
20			816
21			803

Ave Echo Amp: 0.191 ; Ave Echo Amp: 0.05
Ave Noise Amp: 0.251 ; Ave Noise: 1.10
Ave Echo: 6V ; Ave Noise: 0.16V

Ave Sig-to-Noise: 3.16
Ave Sig-to-Noise: 6.4C

CHARACTERISTICS LOG

Sensor No. 2D

Element No.	Echo Ampl.	Noise Ampl	Notes
0			DEAD X0, A0
1			C0
2			E0
3			100
4			120
5			140
6			160
7			
8			S1
9			A1
10			
11			
12			
13			
14			
15			DEAD
16	2.12	.23	NOISY BASELINE C
17	1.87	.25	LFO " " C
18	1.62	.21	B
19	1.45	.25	C NOISY B.LINE
20	1.61	.33	B RESONANCE
21	2.47	.57	B RESONANCE
22	2.04	.45	B RES.
23	.54	.23	D & A RUBBER
24	1.49	.23	C
25	1.92	.20	B
26	2.35	.20	B
27	2.12	.21	B NOISY BASE
28	1.39	.21	B " "
29	2.05	.21	B "
30	2.06	.21	B
31	1.05	.21	C RUBBER

Element No.	Echo Ampl.	Noise Ampl.	Notes
32			DEAD
33			
34			
35			
36			
37			
38			
39			
40			
41			
42			
43			
44			
45			
46			
47			
48			
49			
50			
51			
52			
53			
54			
55			
56			
57			
58			
59			
60			
61			
62			
63			DEAD

Sensor No._____

Element No.	Echo Ampl.	Noise Ampl	Notes
64	1.56	.25	B (N.B.)
65	1.19	.23	B
66 *	2.08	.25	C
67 *	2.22	.28	C NB
68 *	2.57	.37	C NB
69 *	2.47	.37	C NB
70	1.28	.16	C
71	1.33	.16	C
72 *	2.17	.28	B
73	1.60	.22	B
74 *	2.03	.30	C
75 *	2.57	.40	C NB
76 *	2.55	.33	C NB
77	1.98	.25	C
78	1.05	.20	B/C
79	.76	.21	D
80 *	2.55	.49	RES C
81	1.62	.25	C
82 *	2.23	.28	C
83 *	2.17	.25	C
84	1.56	.25	C
85	.90	.25	D/A
86	1.04	.25	A RUBBER
87	.51	.20	A RUBBER
88 *	2.58	.45	RES. C
89 *	2.02	.20	C
90	1.35	.20	B
91 *	2.02	.20	C
92	1.60	.18	C
93	.97	.18	A - RUBBER
94	.73	.18	A RUBBER
95	.56	.18	A RUBBER
96	.19	.16	DEAD

Element No.	Echo Ampl.	Noise Ampl.	Notes
97			DEAD
98			↓
99			
100			
101			
102			
103			DEAD
104 *	2.46	.24	C NB
105	1.25	.21	C
106	1.39	.21	C
107	1.75	.20	C
108 *	2.22	.18	C
109 *	2.56	.22	C
110	1.79	.20	C
111	.69	.18	D SOME RUBBER CHRONIC
112	.70	.18	D " " "
113	.74	.18	A " " "
114	1.03	.16	C
115	1.99	.16	C
116 *	2.28	.16	C
117	1.07	.16	B
118	.80	.17	CHRONIC C
119	.72	.20	RES.
120	.82	.19	A RUBBER/LOCATION
121	.85	.16	" "
122	1.31	.16	B
123	1.95	.16	C
124	.69	.16	D LOCATION
125	.40	.20	A RUBBER & LOC
126	.20	.20	D
127	.27	.20	D
128			DEAD
129			DEAD

Sensor No. 20

Element No.	Echo Ampl.	Noise Ampl	Notes
130	142	19	
131	95	20	A RUBBER
132	80	20	"
133	86	20	" "
134	95	31	A RUBBER
135	40	20	" "
136	42	20	LOCATION RUBBER
137	24	20	SHORT RUBBER
138	42	20	RUBBER
139	1.52	16	C
140	1.16	16	C
141	1.46	20	B
142	74	48	CHRONIC
143	39	18	A/D
144	40	18	D
145	31	20	D
146	21	20	D
147	31	20	D RUBBER
148	21	20	D
149			DEAD
150			
151			
152			
153			
154			
155			
156			
157			
158			
159			
160			
161			
162			

Element No.	Echo Ampl.	Noise Ampl.	Notes
163			DEAD
164			
165			
166			
167			
168			
169			
170			
171			
172			DEAD
173	2.50	30	C
174	74	20	C RUBBER
175	96	88	C
176	59	20	RUBBER
177	95	42	NOISY BACK RUB
178	2.26	52	DES. B
179	2.46	1.10	HUGE DES B
180	2.01	40	DES B
181	9.8	41	N.B C
182	.52	24	NB A RUBBER
183	31	28	NB A " "
184	35	21	A RUBBER
185	1.49	.19	C
186	43	18	A RUBBER
187	92	16	C
188	145	40	RUBBER C
189	2.57	30	DES B
190	2.25	57	DES
191	1.90	32	NOISY BACK
192	1.15	37	RUBBER C
193	71	30	RUBBER A
194	32	20	A RUBBER
195	32	20	RUBBER A

ECHO TYPES -

Type A - Echo looks like large noise - destructive interference from X-talk(?) or possible rubber effects. By manipulating rubber, the echo could be made to look "normal" with enough size to be detectable.

Type B - Normal echo - usually W shaped - stands above noise by considerable margin, with large downward leading edge - clean, no interference.

Type C - Fairly normal echo, but with evidence of interference - jagged edges, etc.

Type D - Chronically low - pushing and squeezing won't bring echo close to normal (shorting and poor ground, some rubber effects?)

1) Type A - Due to X-talk or rubber effects?

2) Generally, if an echo was < 1.0 volt I would guess it would not work - not enough edge to detect above noise.

3) Many elements had high frequency noise starting after echo.

4) Circled elements were unusually noisy around 2 - 3 μs (mostly w + Dir).

5) I noted a great deal of variety (between 4 and 6 μs) in where the echo occurred even between adjacent elements.

6) When an echo was made to move, there was always a "residual" unmoving echo - X-talk - probably not a problem.

7) Phantom echo - attenuated almost instantly upon contact; maintained approx. same size through several cycles - actually increased in size on second echo.

8) Corners seem to be particularly subject to strange rubber effects.

9) Medial array seems to have much less "interference" than proximal array - baseline is cleaner and flatter. Medial array showed at least some sign of residual echo in almost every element, but usually noise level.

Medial array - "D" type elements possibly due to shorting - found some intermittent elements.

10) Found that many of the elements with large echos (> 1.0V) had some sort of strange "jitter" in the noise unless there was a discernible "residual" denoted by a blue mark.

THIS PAGE

INTENTIONALLY

LEFT BLANK

APPENDIX 3

Electronics Documentation

Air Force Hand Project
68230 Port Allocation

PAn; PBn Denotes Port A Position n; Same for Port B.
Data Bits correspond to TOF_OUT
Address Bits correspond to 230_OUT

Port Designation:	PA7	PA6	PA5	PA4	PA3	PA2	PA1	PA0	PB7	PB6	PB5	PB4	PB3	PB2	PB1	PB0
Address Bits:	X	X	X	X	A11	A10	A9	A8	A7	A6	A5	A4	A3	A2	A1	A0
Data Bits:	X	X	A	D	D11	D10	D9	D8	D7	D6	D5	D4	D3	D2	D1	D0

Note: TOF_OUT is connected (via bus) to 230_IN. Port is bidirectional. For part of the cycle it is an output - providing address data to sensor. For the other part, it is an input port - having TOF data supplied to it. The handshake lines dynamically configure the port for either input or output.

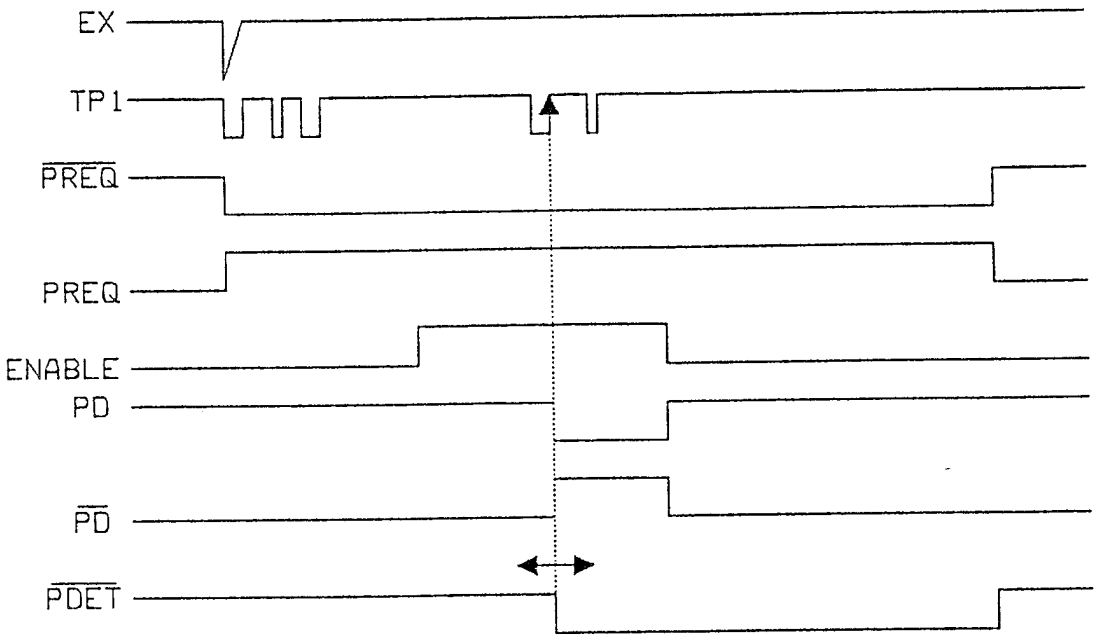

Bonneville Scientific	PROJECT: AIR FORCE TOF TIMING	DATE MARCH 10 1993
	ENG. : Ahmad attaie / REV. 2	FILENAME B42.DBF

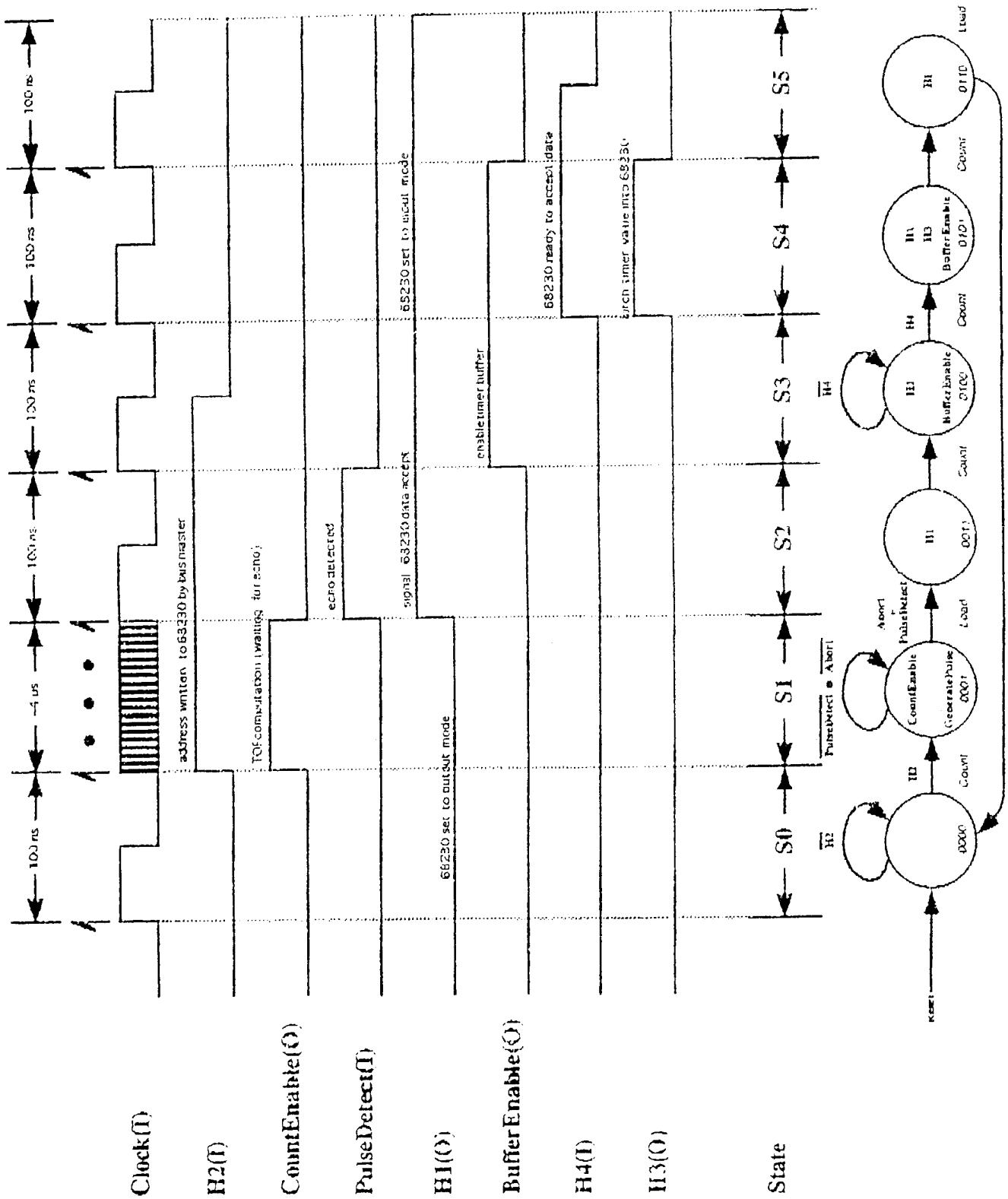
Clock(I)
H2(I)
CountEnable(O)
PulseDetect(I)
H1(O)
BufferEnable(O)
H4(I)
H3(O)
State
100 ns
100 ns
100 ns
100 ns
100 ns
address written to 68230 by bus master
TOF computation (waiting for echo)
echo detected
signal 68230 data accept
68230 set to output mode
68230 set to input mode
enable timer buffer
68230 ready to accept data
S0
S1
S2
S3
S4
S5
PulseDetect • Abort
Abort + PulseDetect
Load
Count
Count
Count
Count
Load
Reset

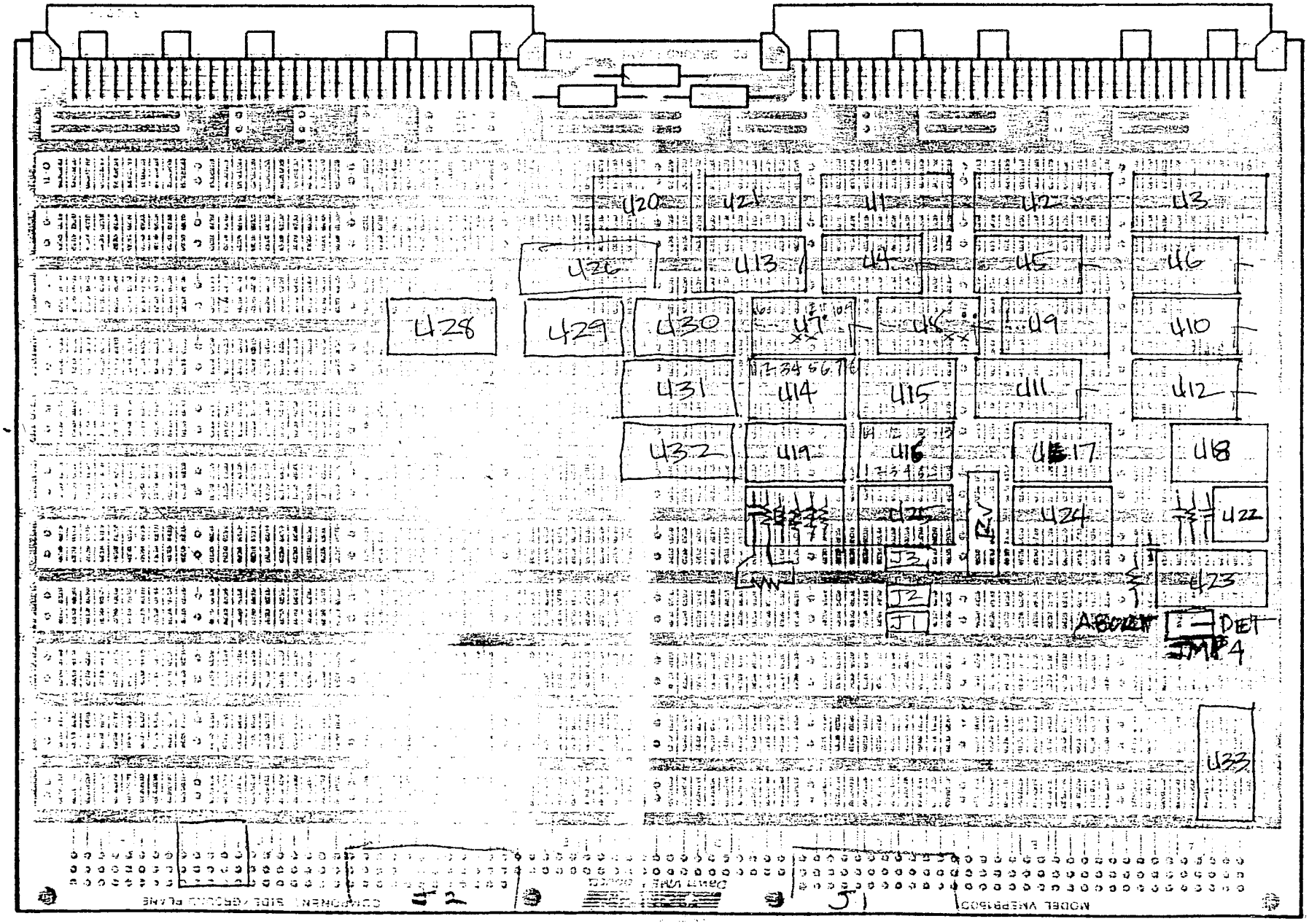
U20
U21
U1
U2
U3
U26
U13
U4
U5
U6
U28
U29
U30
U7
U8
U9
U10
U31
U14
U15
U11
U12
U32
U19
U16
U17
U18
U25
U24
U22
J3
J2
J1
U23
DET
U33

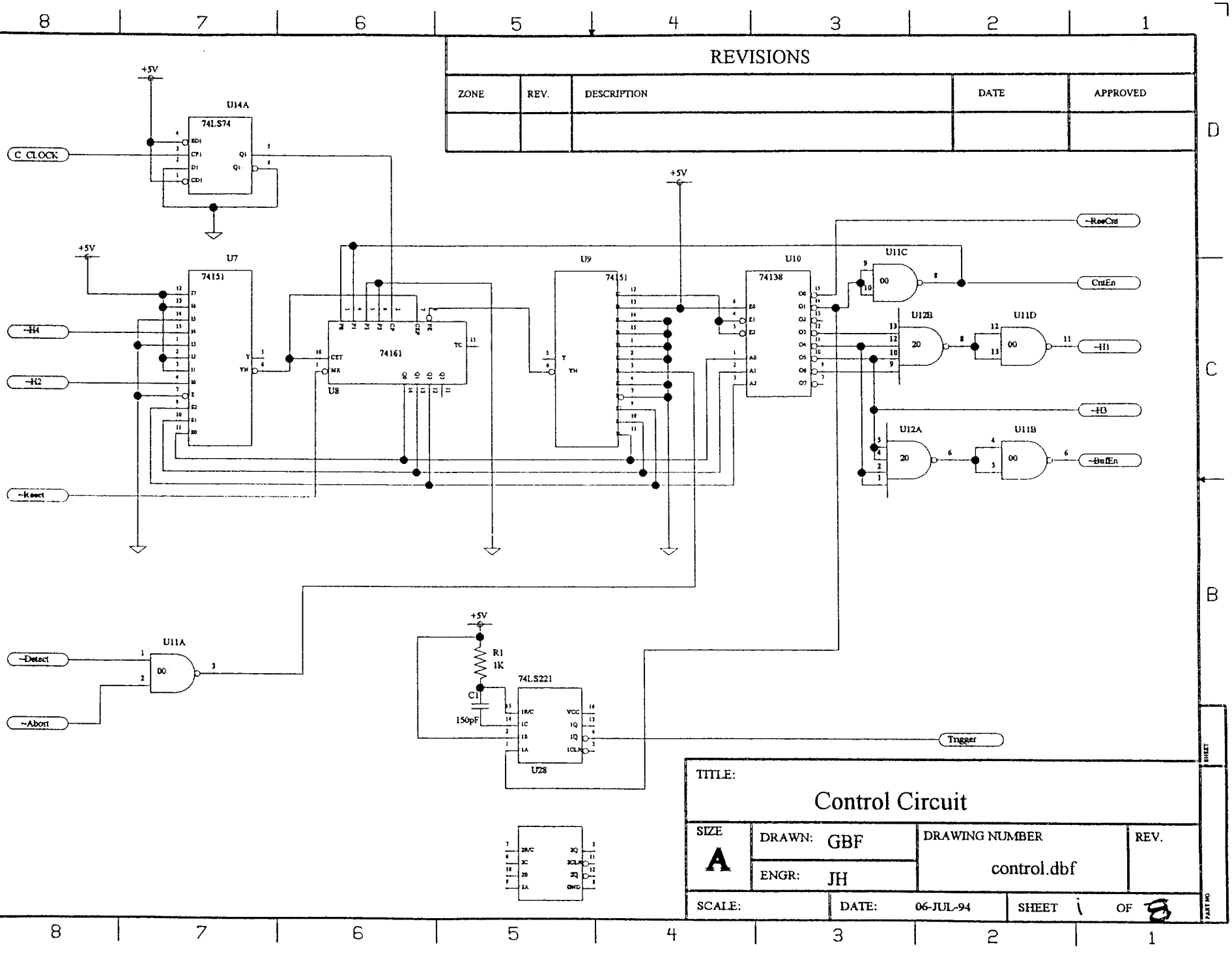
REVISIONS
ZONE
REV.
DESCRIPTION
DATE
APPROVED
U14A
74LS74
C CLOCK
+5V
U7
74151
~H4
~H2
~Reset
U8
74161
U9
74151
U10
74138
~ResCnt
CntEn
U11C
U12B
U11D
~H1
~H3
U12A
U11B
~BuffEn
U11A
~Detect
~Abort
R1
1K
C1
150pF
74LS221
U28
Trigger
TITLE:
Control Circuit
SIZE
A
DRAWN: GBF
ENGR: JH
DRAWING NUMBER
control.dbf
REV.
SCALE:
DATE: 06-JUL-94
SHEET 1 OF 8

REVISIONS				
ZONE	REV:	DESCRIPTION	DATE	APPROVED

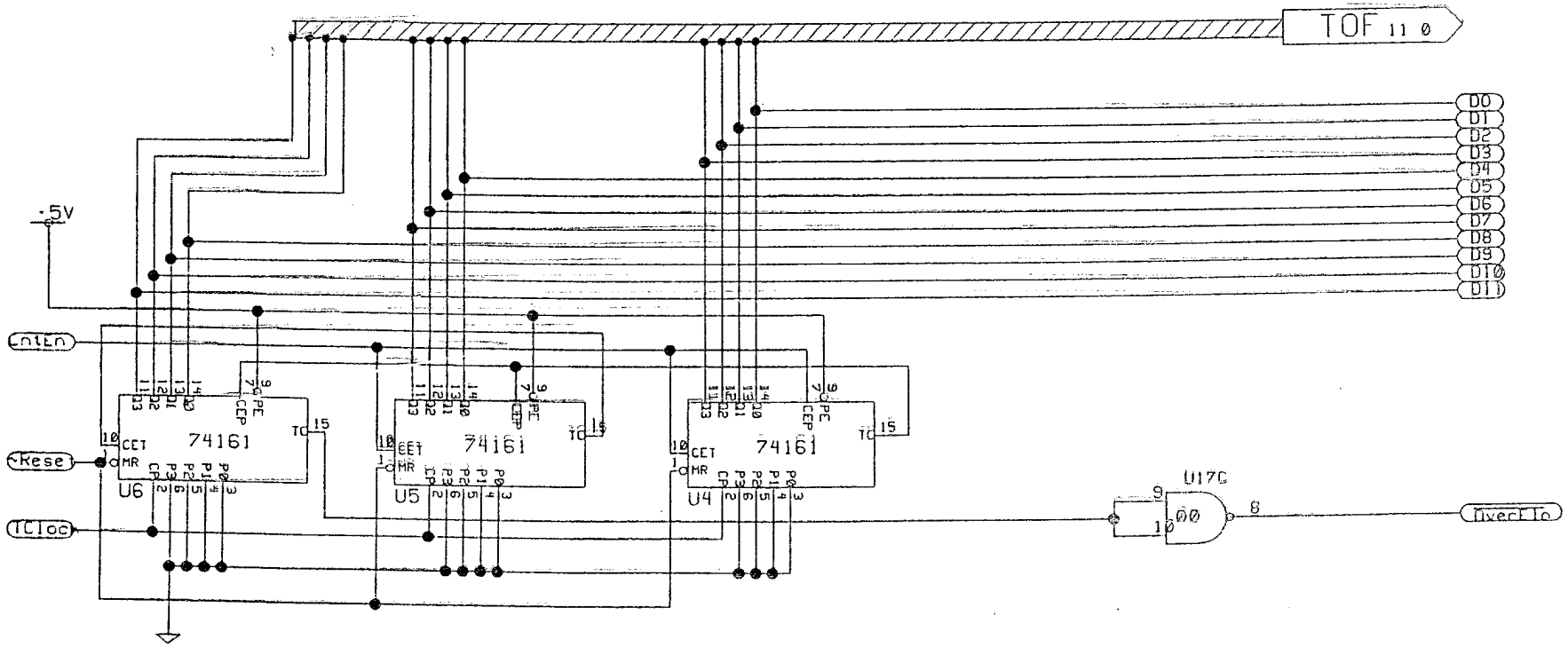

TITLE: TOF Counter			SHEET
SIZE: A	DRAWN GBF	DRAWING NUMBER: TOF_CNTR.DBF	REV.
	ENGR JH		
SCALE	DATE 06-JUL-95	SHEET 2 OF 8	PART NO.

REVISIONS				
ZONE	REV.	DESCRIPTION	DATE	APPROVED

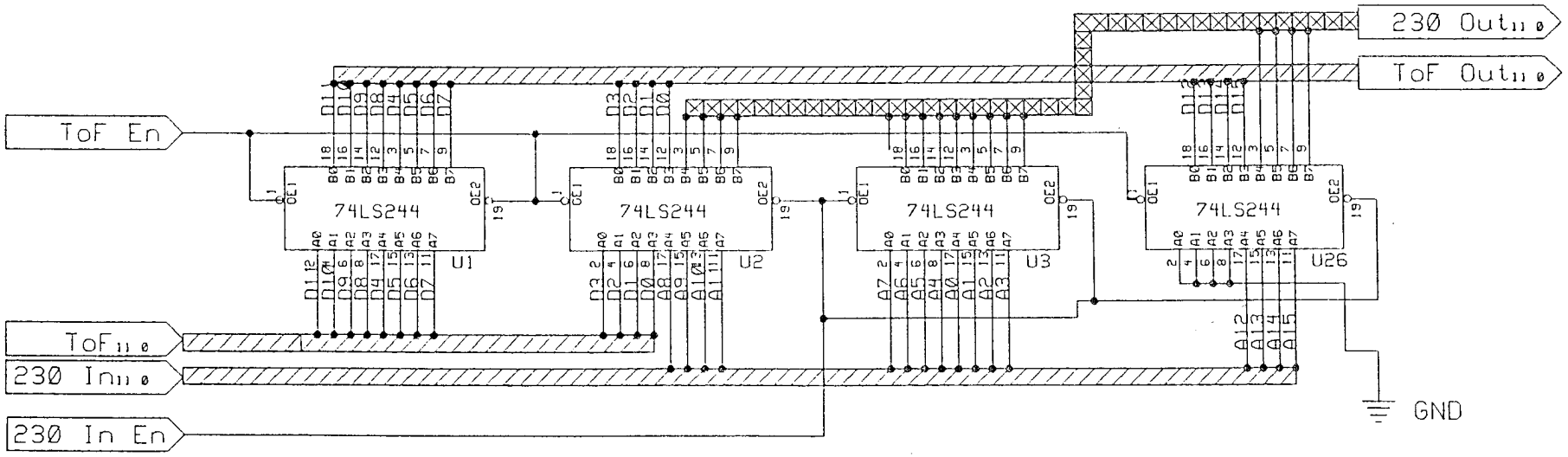

TITLE: Buffers			
SIZE: A	DRAWN: GBF	DRAWING NUMBER: buffers.dbf	REV.
	ENGR: JH		
SCALE	DATE: 06-JUL-99	SHEET 3 OF 8	PART NO.

REVISIONS				
ZONE	REV.	DESCRIPTION	DATE	APPROVED

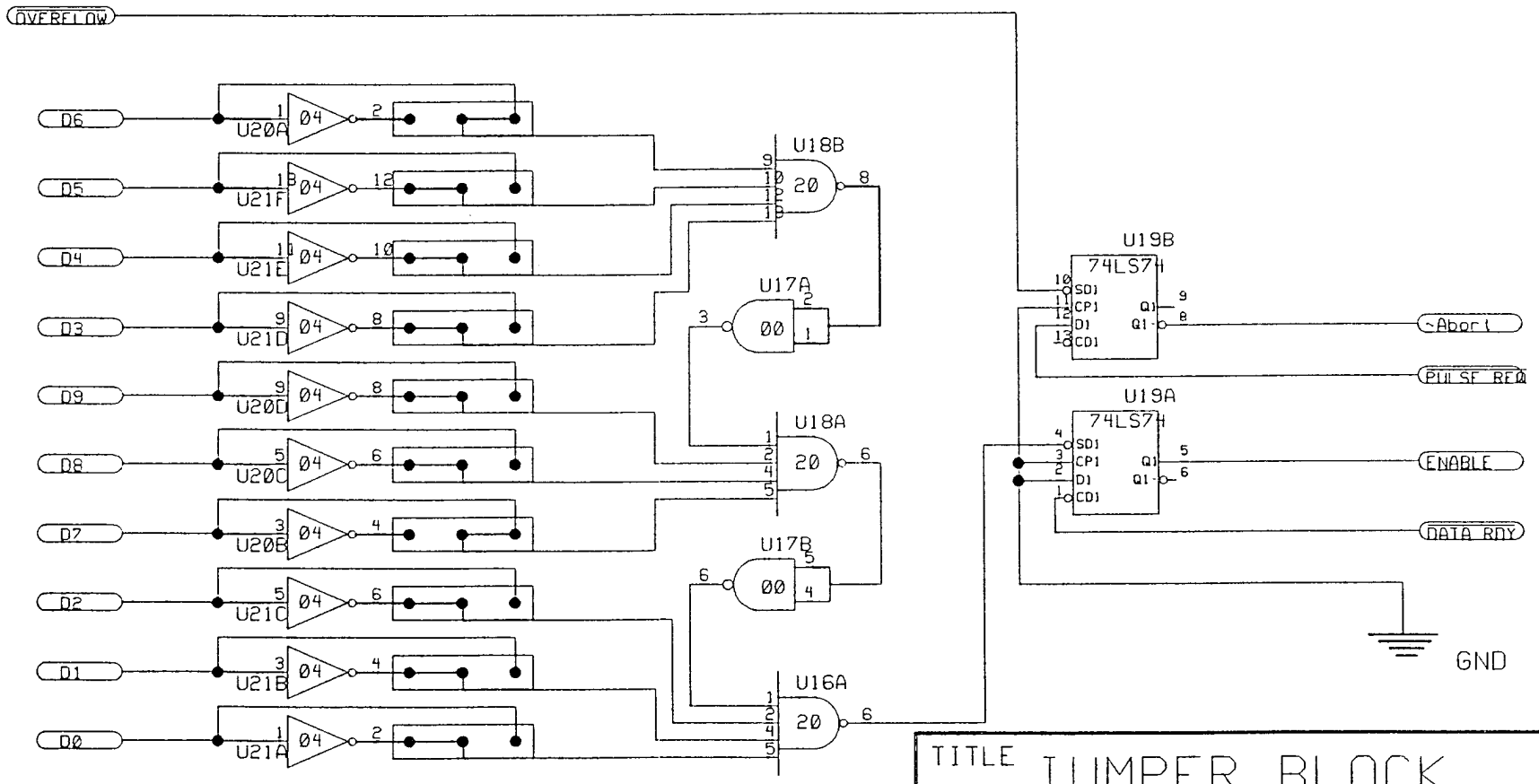

JUMPERS

TITLE	JUMPER BLOCK		SHEET
SIZE A	DRAWN GBF	DRAWING NUMBER	REV.
	ENGR		PART NO.
SCALE	DATE 06-JUL-89	SHEET 4 OF 8	

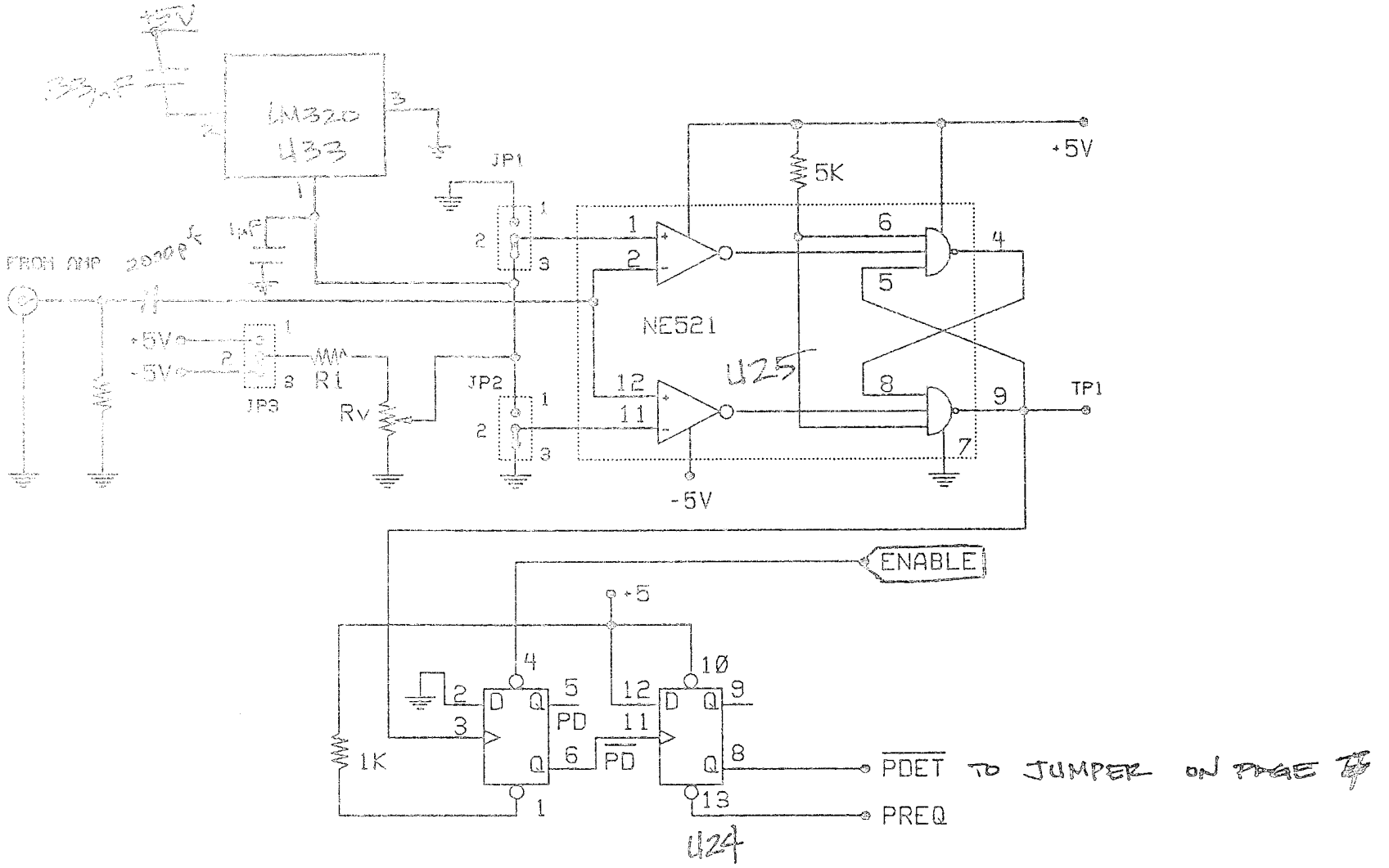

Bonneville Scientific	PROJECT: ZERO CROSSING DETECTOR	DATE MARCH 10 1993
	ENG. : Ahmad attale / REV. 2	FILENAME B41.DBF

REVISIONS				
ZONE	REV.	DESCRIPTION	DATE	APPROVED

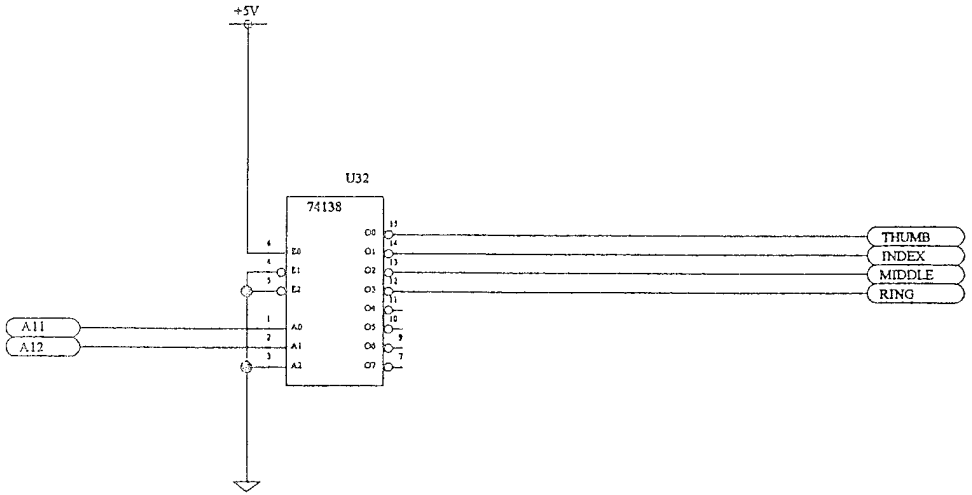

TITLE: Digit Select			
SIZE: A	DRAWN: GBF	DRAWING NUMBER: DIG_SEL.DBF	REV.
	ENGR: JH		
SCALE:	DATE: 06-JUL-94	SHEET 6 OF 8	

151

REVISIONS				
ZONE	REV.	DESCRIPTION	DATE	APPROVED

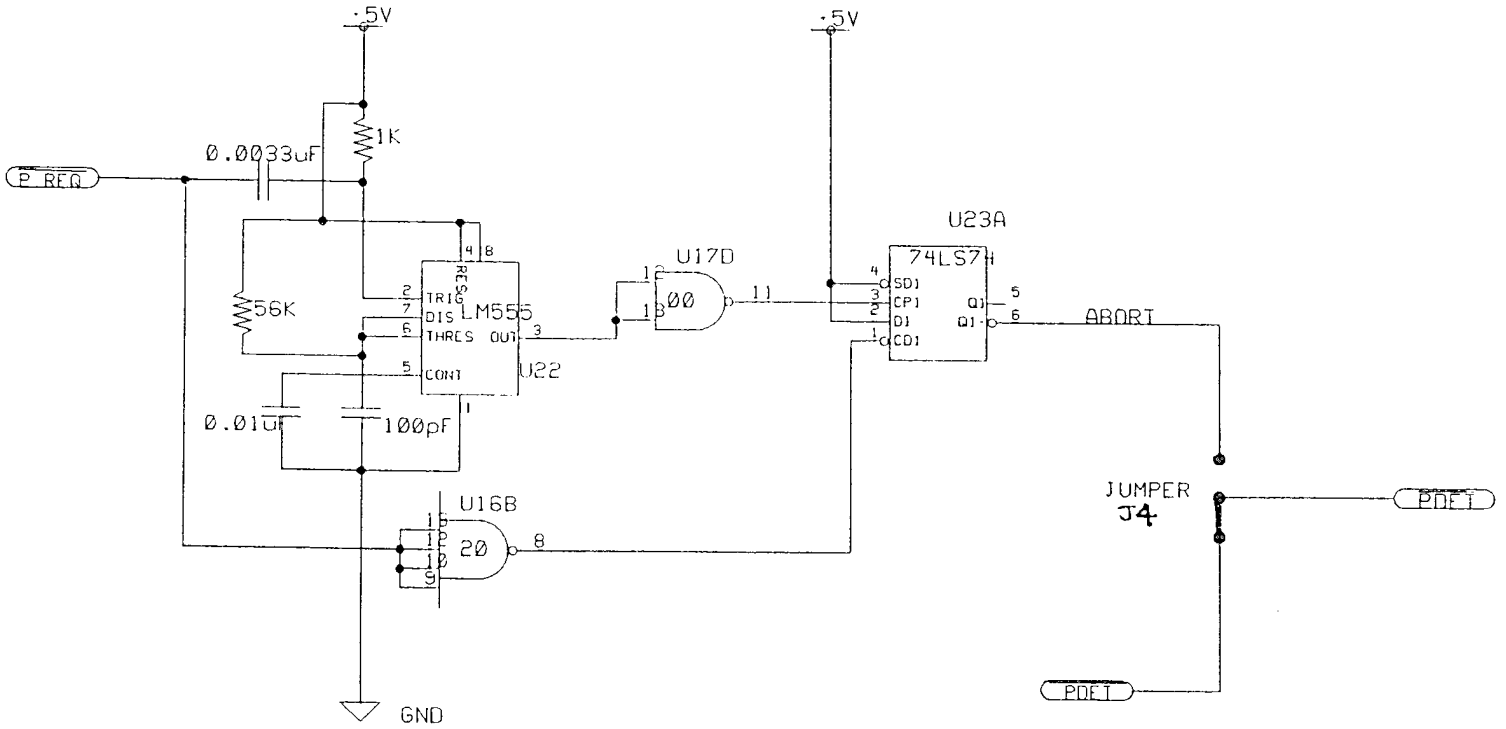

Not Used

TITLE			
PULSE DETECT GENERATOR			
SIZE A	DRAWN gbf	DRAWING NUMBER	REV.
	ENGR J. H	puls_det.dbf	
SCALE	DATE 06-JUL-89	SHEET 7 OF 8	

SHEET

PART NO.

152

REVISIONS				
ZONE	REV.	DESCRIPTION	DATE	APPROVED

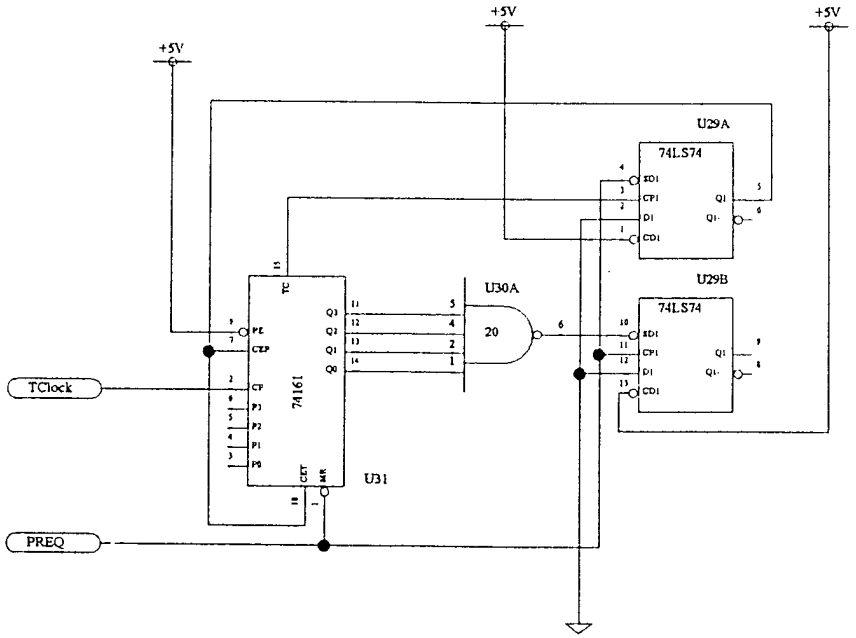

TITLE: Not Used			
SIZE A	DRAWN:	DRAWING NUMBER	REV.
	ENGR:		
SCALE:	DATE: 06-JUL-94	SHEET 8 OF 8	

153

REVISIONS				
ZONE	REV.	DESCRIPTION	DATE	APPROVED

Array Addr. Order

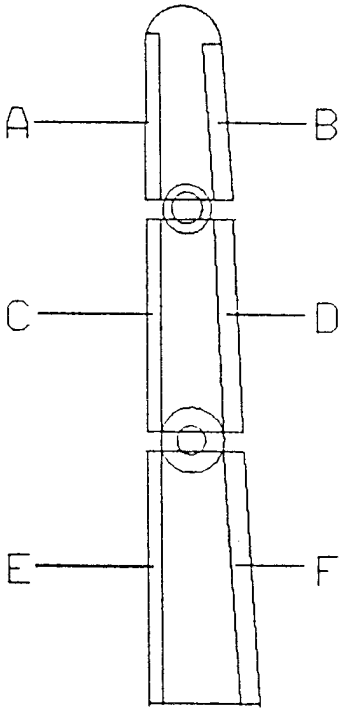

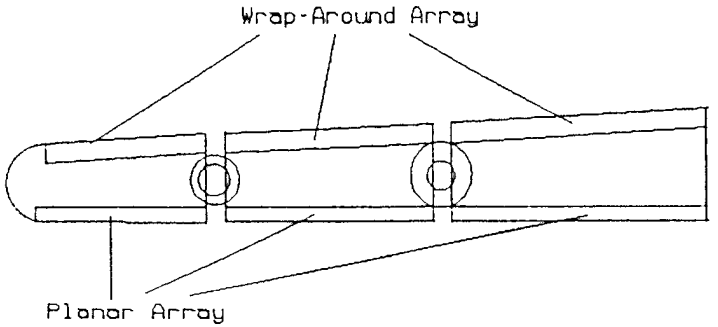

Order of Array Scanning

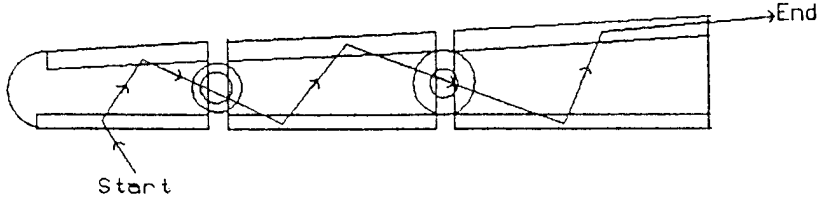

TITLE: Digit Addressing			
SIZE A	DRAWN: J.H.	DRAWING NUMBER	REV.
	ENGR: J.H.		
SCALE: N.A	DATE: 2/28/92	SHEET 1 OF 2	

SHEET

PART NO.

154

Air Force Digit Address

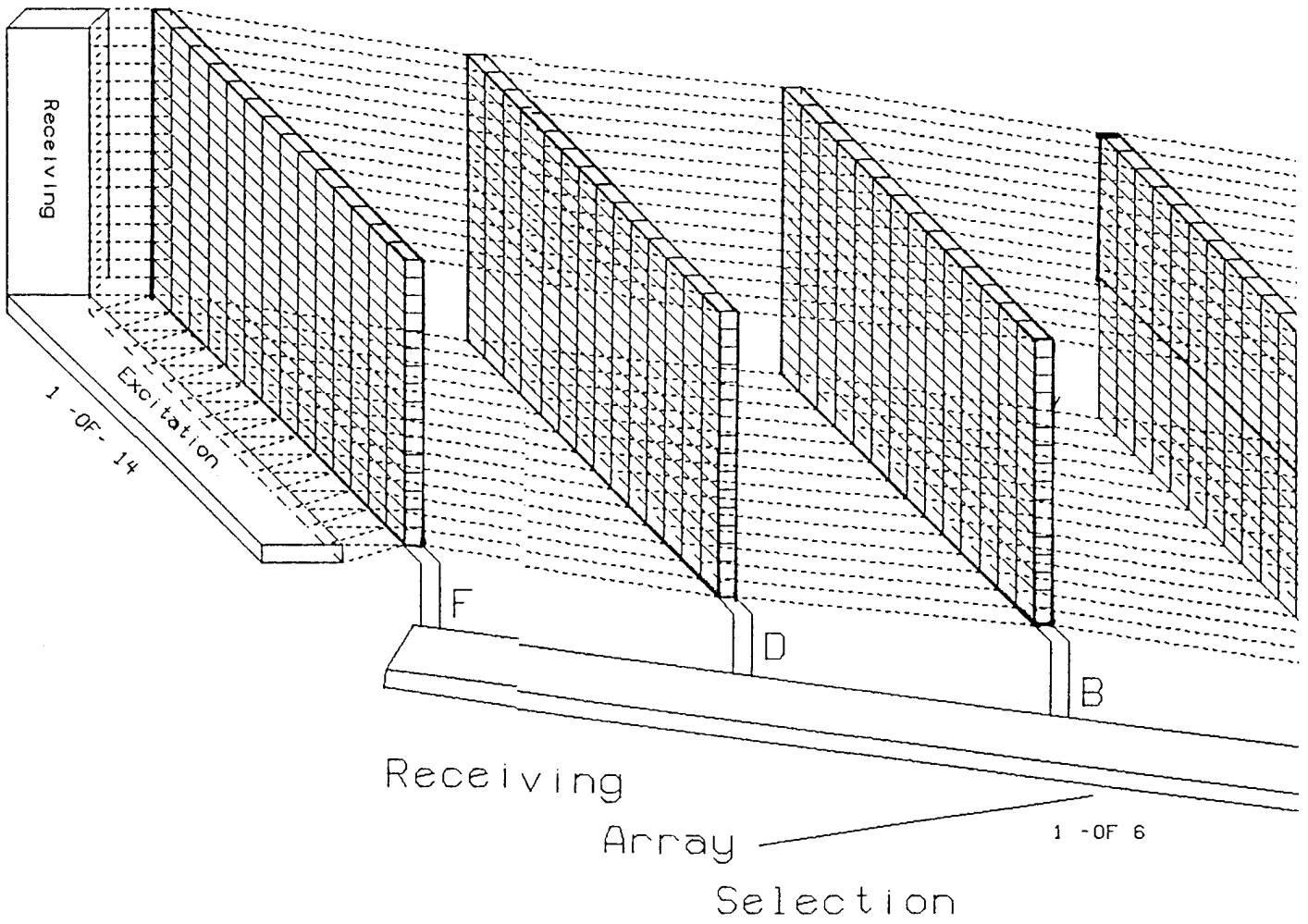

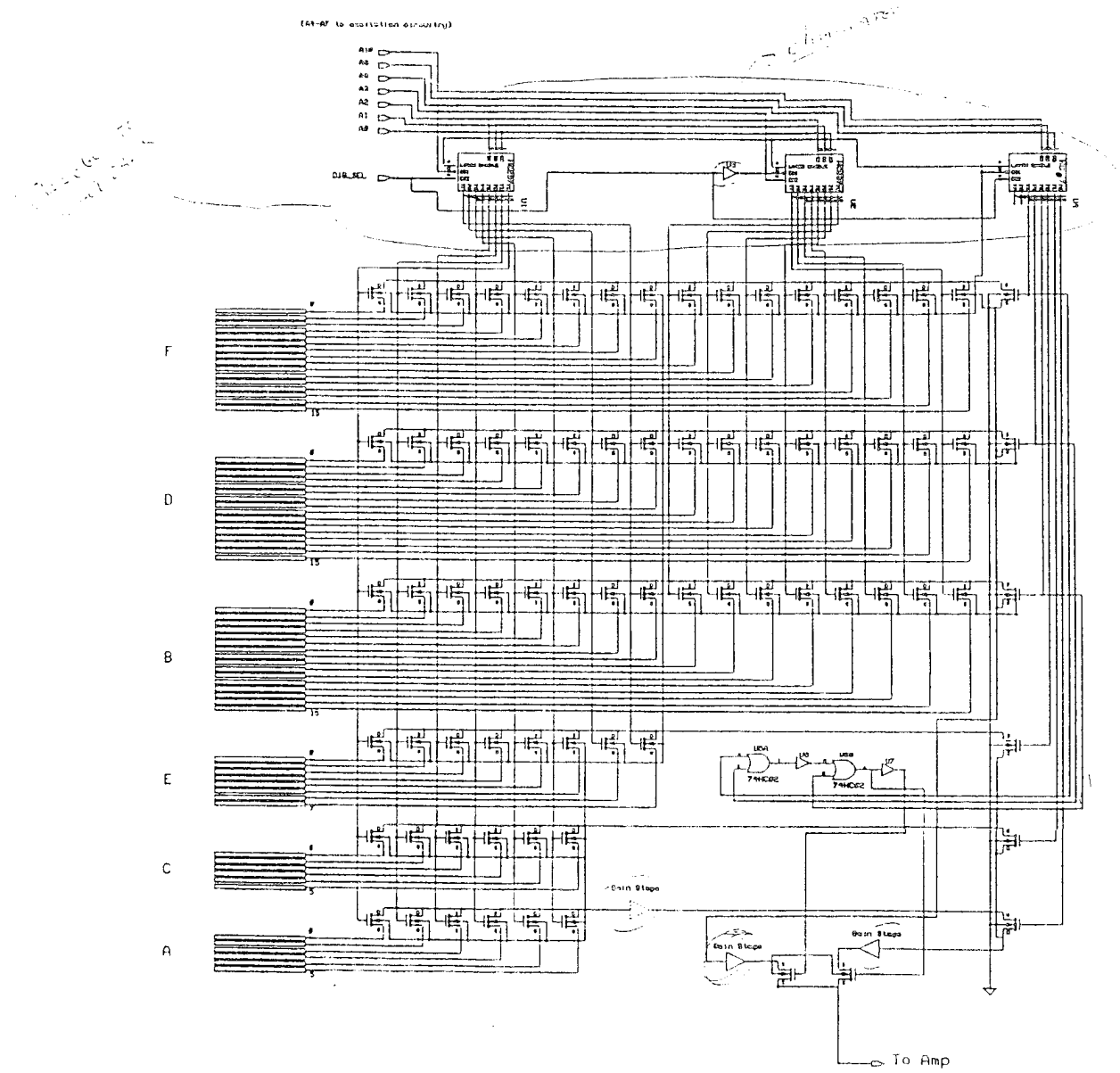

Notes:

- sst-215

CHANGE TO FX. 2

THIS WILL PLACE U3 AT THIS GET RID OF WITH IC PACKAGE. BY

INV. DIOLSE TO DIOLSE

MUX FOR 1 DIST

REVI		
ZONE	REV.	DESCRIPTION

DATABASE FILE	PROPRIETARY	Air Mux
CHECKED BY:	THIS DRAWING DOCUMENT CONTAINS INFORMATION WHICH IS PROPRIETARY TO AND IS THE PROPERTY OF THE	
DATE:	AND MAY NOT BE USED, REPRODUCED OR DISCLOSED IN ANY MANNER WITHOUT THE EXPRESSED WRITTEN CONSENT FROM:	TITLE
APPROVED		
DATE:		
TOLERANCES:	NEXT HIGHER ASSEMBLY:	SIZE D
X.X		
X.XX		
X.XXX		
ANGLES		SCALE:

MULTIPLEXER SCHEMATIC (PARTIAL)

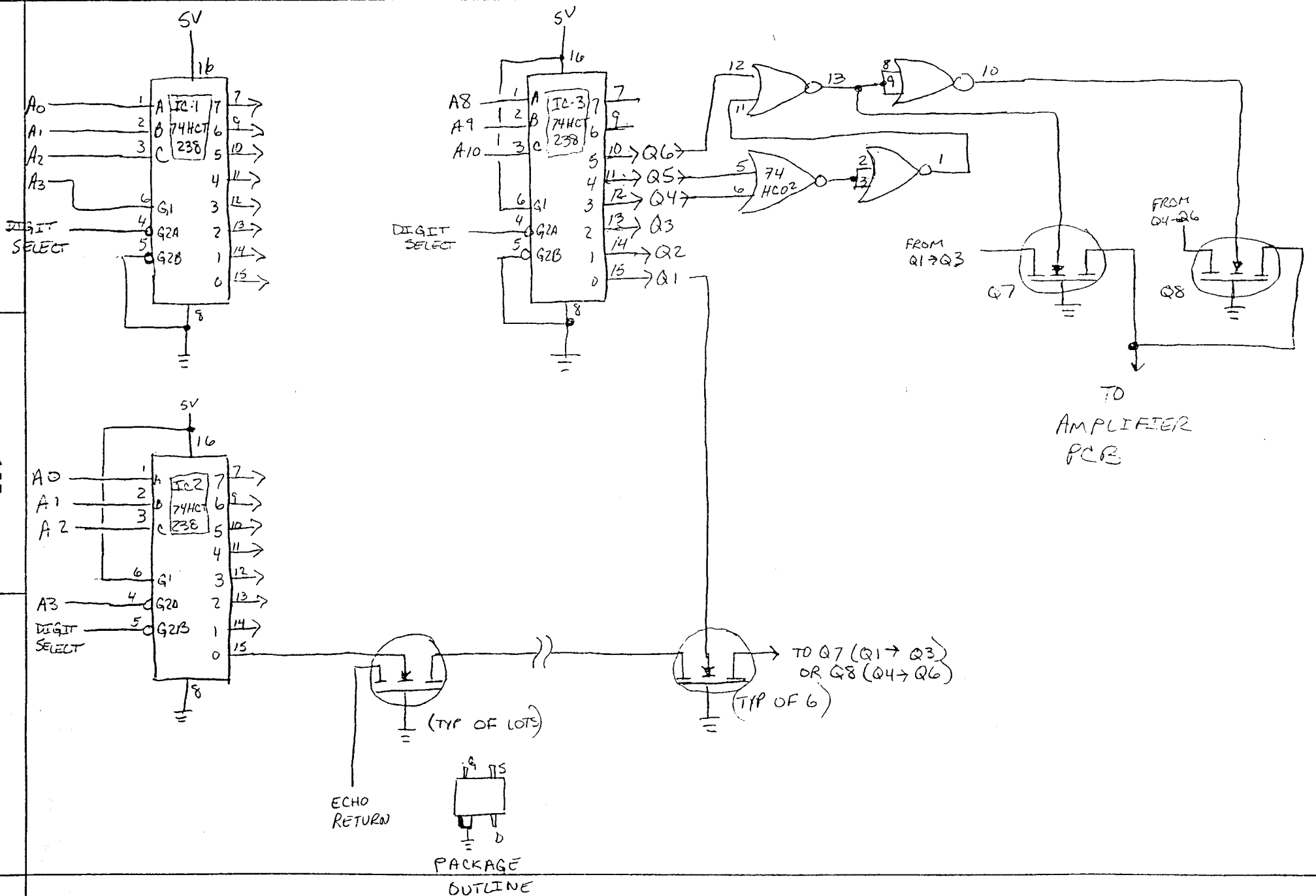

AMPAD
22-141 50 SHEETS
22-142 100 SHEETS
22-144 200 SHEETS

Vcc, Vee = +/- 12V
U1 =Dual current feedback opamp
e.g. LM6182
CLC432

80 db Amplifier

Figure 7

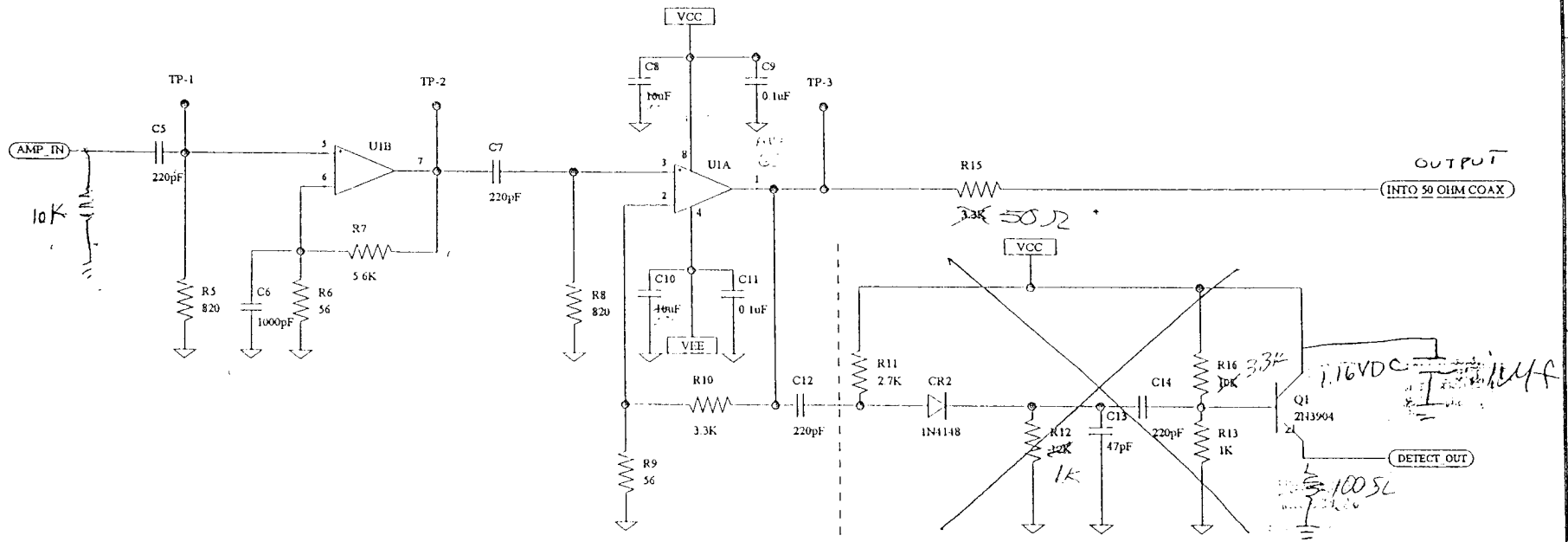

+5 ——— VCC

0

-5 ——— VEE

zone	rev.	description	date

TITLE: Amplifier Circuit

SIZE	DRAWN	PART NUMBER	REV.
A	G.B.F.	AMP0 0006	00
	ENGR: D.D.K.		
SCALE:	DATE: 24-MAR-94	SHEET OF	

Bonneville Scientific, Inc. reserves the right to make changes without further notice to any products herein to improve reliability, function or design. B S I does not assume any liability arising out of the application or use of any product or circuit described herein; nor does it convey any license under its patent rights, nor the rights of others.

Built 3/24/94

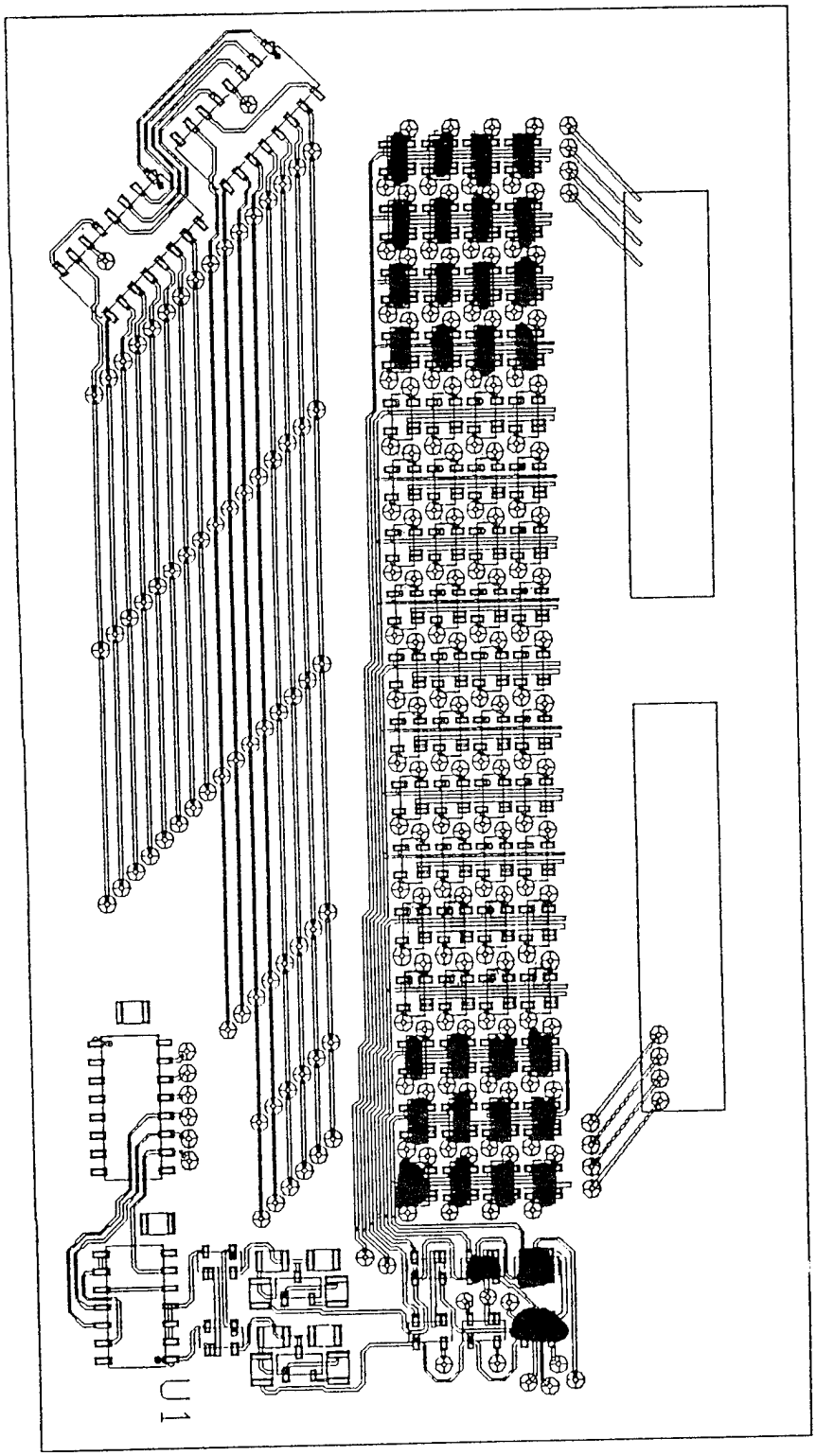
U1

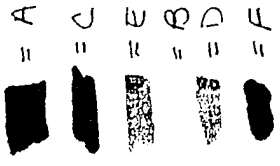
A
C
E
B
D
F

MULTIPLEXER BOARD

TOP VIEW

30 JUN 9[illegible]

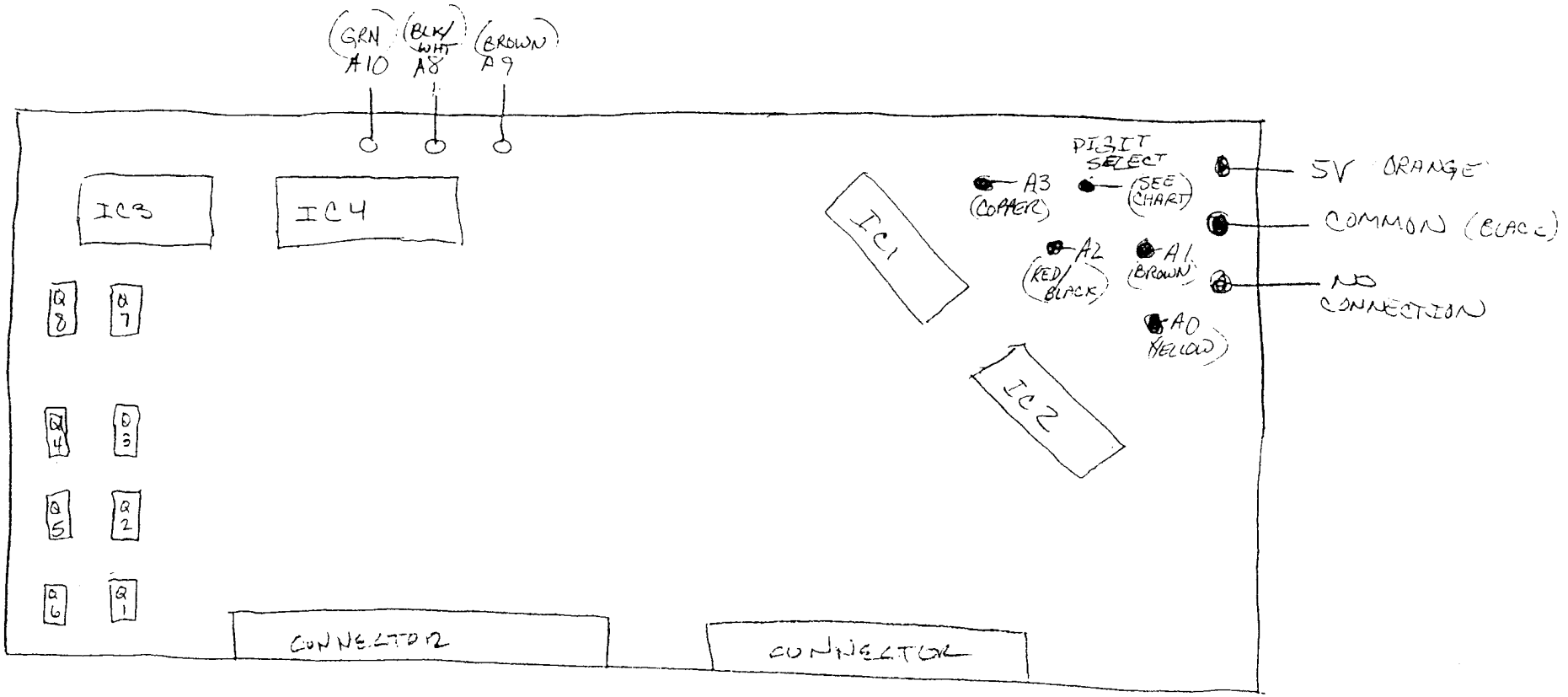

AMPAD 22-141 50 SHEETS 22-142 100 SHEETS 22-144 200 SHEETS

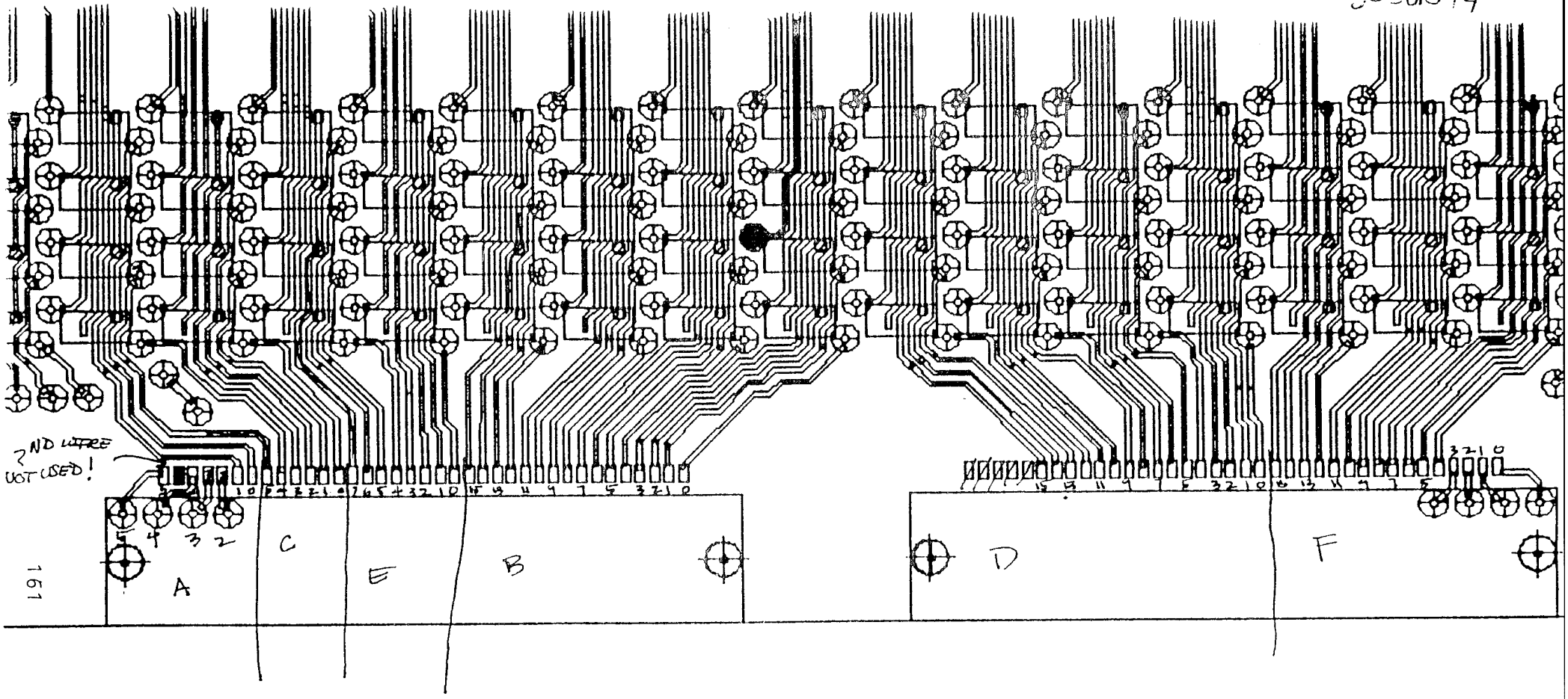

161

2ND WIRE = NOTHING

1ST 5 WIRES = NOTHING

A & C SECTIONS	E SECTION
5 = 21	7 = 23
4 = 20	6 = 22
3 = 19	5 = 21
2 = 18	4 = 20
1 = 17	3 = 19
0 = 16	2 = 18
	1 = 17
	0 = 16

30 JUN

EXCITATION PCB -
TOP VIEW

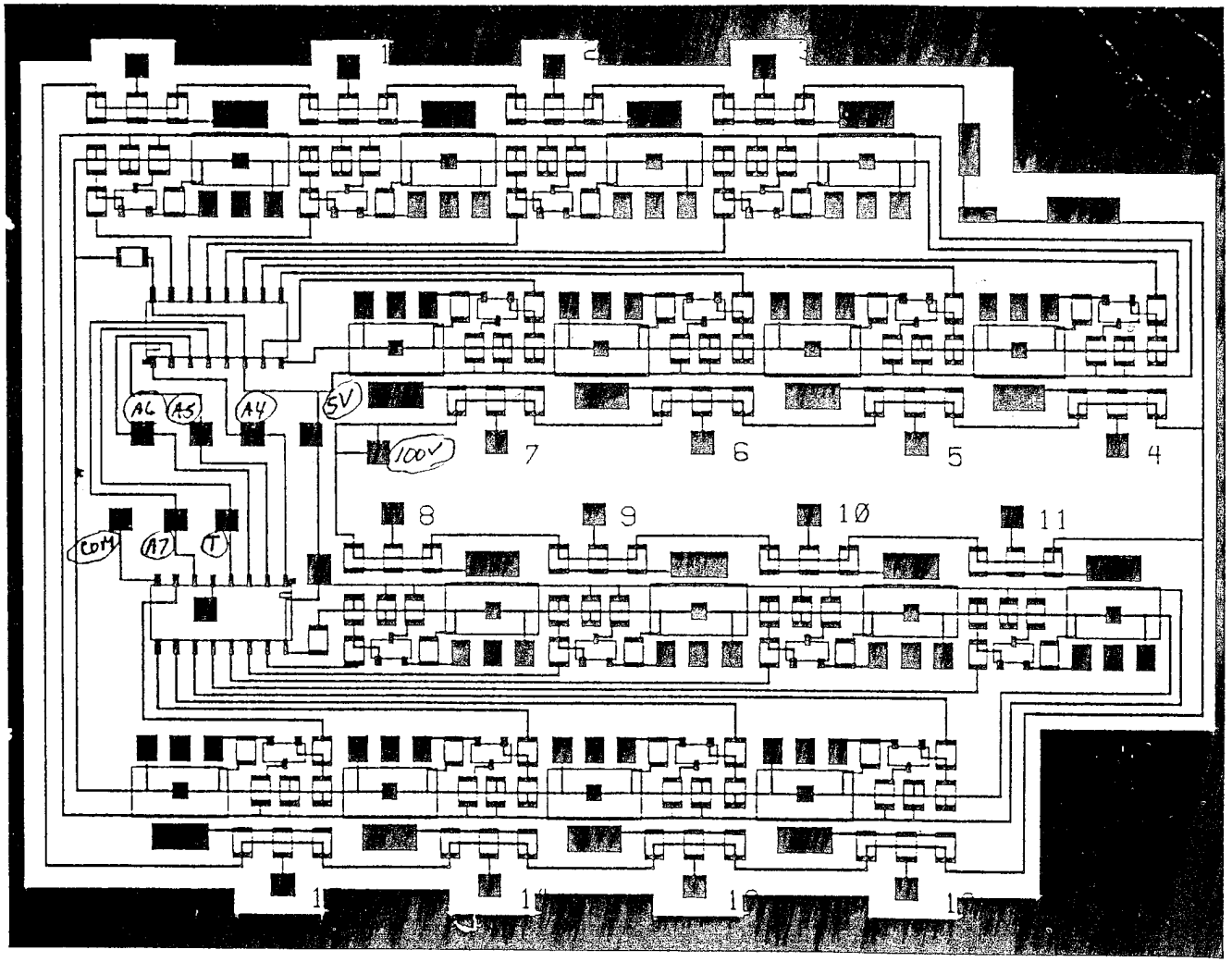

National Brand
42-351 50 SHEETS PER PAD 5 SQUARE
42-352 100 SHEETS PER PAD 5 SQUARE
42-389 200 SHEETS PER PAD 5 SQUARE
42-393 200 RECYCLED WHITE 5 SQUARE
42-399 200 RECYCLED WHITE 5 SQUARE
Made in U.S.A.

30 JUN 94

EXCITATION PCB
REAR VIEW

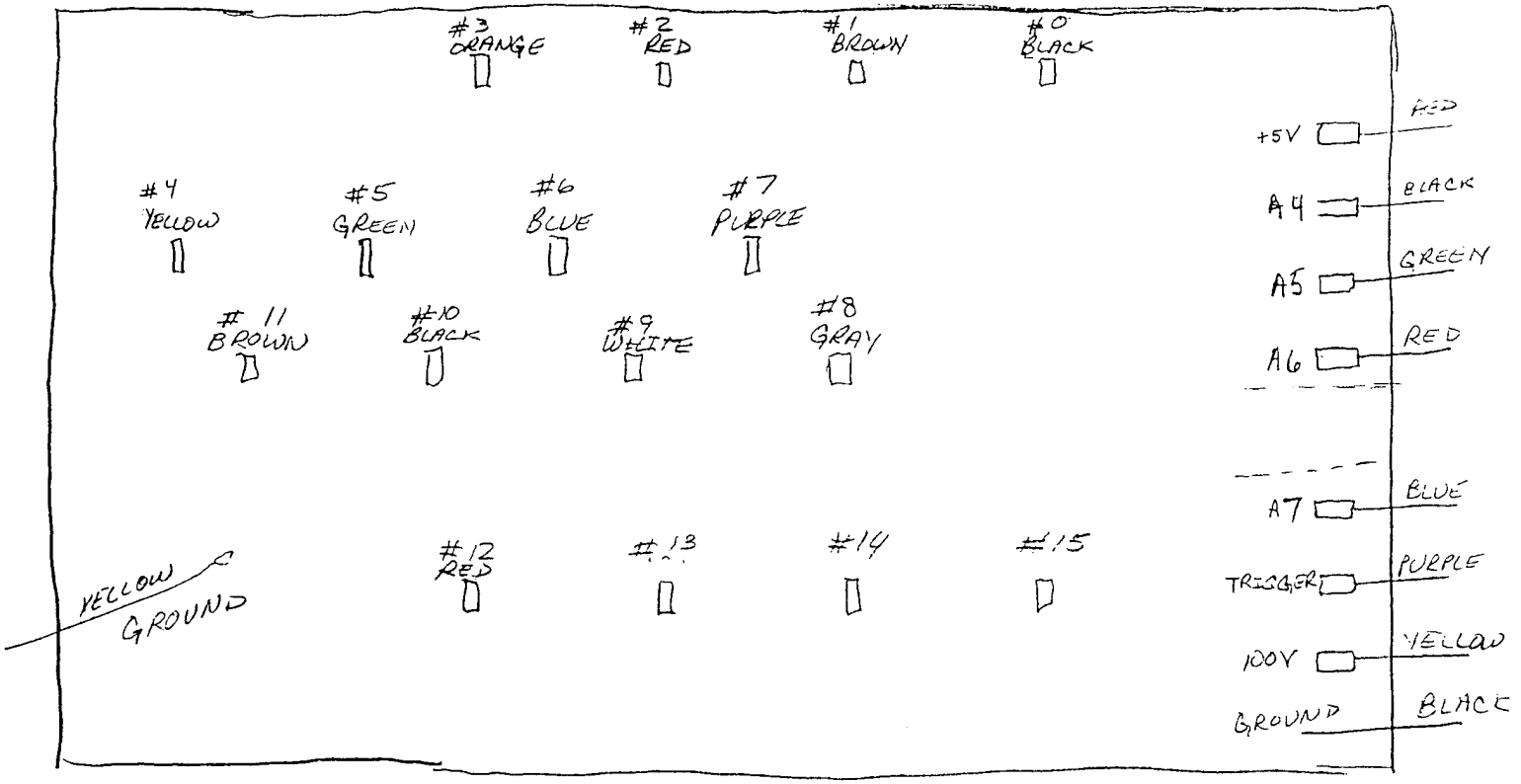

EXCITATION SCHEMATIC

30 JUN 94

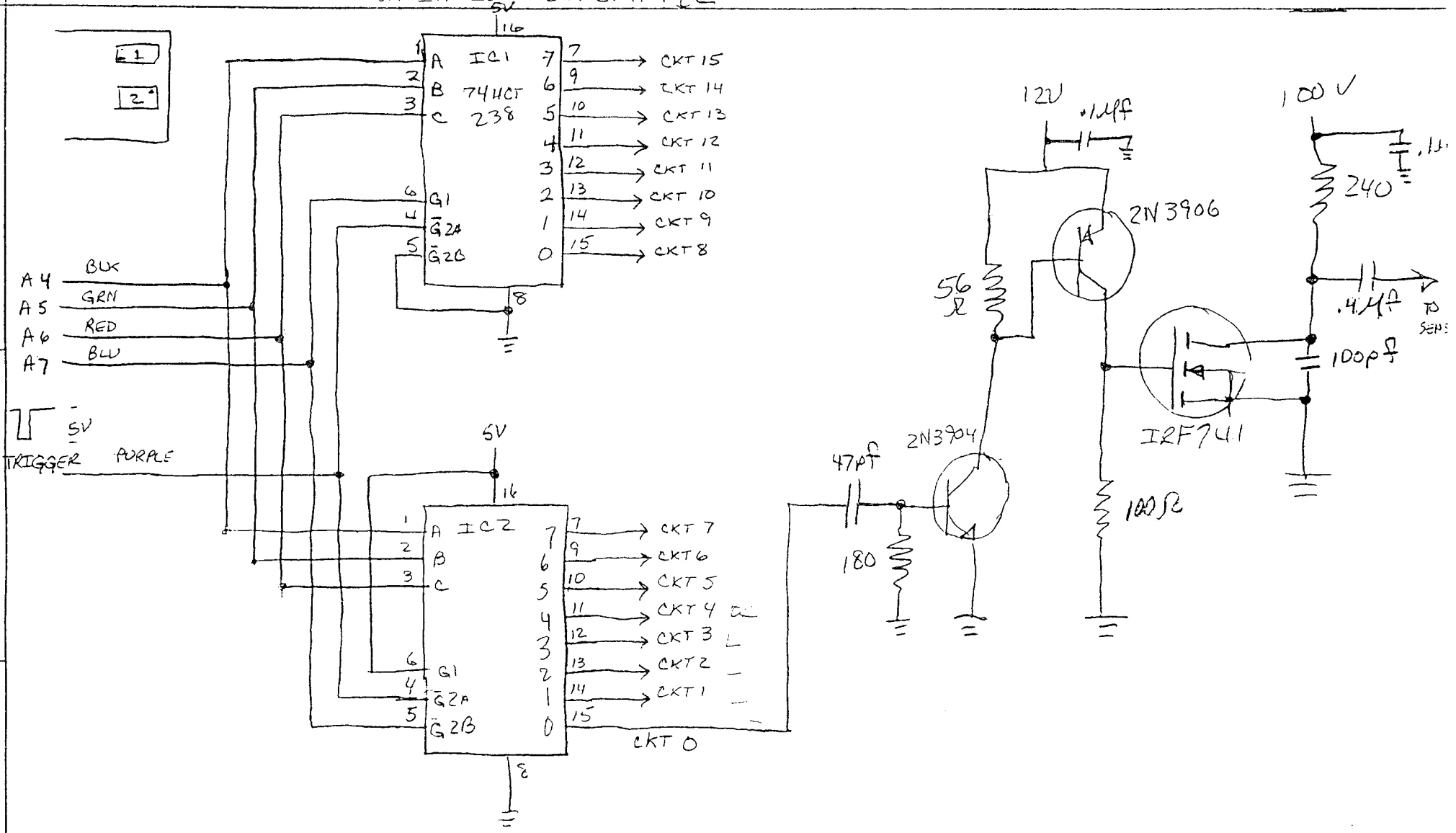

AMPAD
22-141 50 SHEETS
22-142 100 SHEETS
22-144 200 SHEETS

30 JUN 94

CABLE PINOUTS

CABLE #1 - FROM SUN TPX → PME-68-26

SUN	DTE TO DTE	PME 68-26	
1	↔ ground ↔	1	
TXD 2	→	4	RXD
RXD 3	←	2	TXD
RTS 4	→	5	CTS
CTS 5	←	3	RTS

CABLE #2 FROM WY-50 → PME-68-26

WY-50	DTE - TO - DTE	PME 68-26	
1	↔ ground →	1	
TXD 2	→	4	RXD
RXD 3	←	2	TXD
RTS 4	→	5	CTS
CTS 5		3	RTS

Everex Cable

9	25
1	8
2	3
3	2
4	20
5	7
6	6
7	4
8	5
9	22

42-381 50 SHEETS 5 SQUARE
42-382 100 SHEETS 5 SQUARE
42-389 200 SHEETS 5 SQUARE
NATIONAL

22-141 50 SHEETS
22-142 100 SHEETS
22-144 200 SHEETS
AMPAD

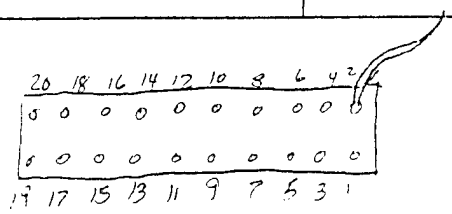

CONNECTOR VIEW
(WIRE SIDE)

CONNECTOR #1

PIN	DESCRIPTION	CABLE	COLOR
1	A0	BL 1	YELLOW
2	INDEX SELECT	BL 2	BLUE
3	A1	BL1	BROWN
4	MIDDLE SELECT	BL2	YELLOW
5	A2	BL1	RED/BLACK
6	RING SELECT	BL1	ORANGE
7	A3	BL1	COPPER
8	-12V	WHT	GRN
9	A8	BL2	BLK/WHT
10	—	—	—
11	A9	BL2	BRN
12	—	—	—
13	A10	BL2	GRN
14	—	—	—
15	+5V	WHT	ORANGE
16	—	—	—
17	+12V	WHT	RED & PURPLE
18	—	—	—
19	COMMON	WHT	WHITE & BLACK
20	—	—	—

CONNECTOR #2

PIN	DESCRIPTION	CABLE	COLOR
1	A4	BL1	BLK/WHT
2	THUMB SELECT	BL 2	GRAY
3	A5	BL 1	GREEN
4	—	—	—
5	A6	BL1	RED/WHT
6	—	—	—
7	A7	BL1	BLUE
8	—	—	—
9	100V	WHT	YELLOW
10	—	—	—
11	TRIGGER	BL1	VIOLET
12	—	—	—
13	+12V	WHT	VIOLET
14	—	—	—
15	—	—	—
16	—	—	—
17	—	—	—
18	—	—	—
19	—	—	—
20	—	—	—

Appendixes 4, 5, and 6 are contained in AL/CF-SR-1995-0006.

THIS PAGE

INTENTIONALLY

LEFT BLANK

APPENDIX 7

Statement of Work
for
Modified Contract

68X 68X

AMENDMENT OF SOLICITATION/MODIFICATION OF CONTRACT

1. PAGE 1 OF 4

2. PROC INSTRUMENT ID NO. (PIIN)	3. SPIIN	4. EFFECTIVE DATE	5. REQUISITION/PURCHASE REQUEST PROJECT NO.	6. DOC/DMS RATING
F41624-91-C-6001	P00004	28 JAN 1992	FY8990-92-00030	

7. ISSUED BY CODE FQ2826

DEPARTMENT OF THE AIR FORCE
AIR FORCE SYSTEMS COMMAND
HUMAN SYSTEMS DIVISION/PK
BROOKS AFB TX 78235-5320
BUYER: MAJ LESLIE BALL, HSD/PKR
(512) 536-9343

8. ADMINISTERED BY (IF OTHER THAN BLOCK 7) CODE S0602A

DCMAO DENVER
ORCHARD PLACE2, SUITE 200
5975 GREENWOOD PLAZA BLVD
ENGLEWOOD CO 80111-4715
PHONE: (303) 762-7323

9. CONTRACTOR NAME AND ADDRESS CODE 48264 FACILITY CODE

BONNEVILLE SCIENTIFIC, INC
918 EAST 900 SOUTH
SALT LAKE CITY UT 84105
(801) 359-0402

IF "9" FOR MULTIPLE FACILITIES SEE SECT "K"

10. SECURITY CLAS

11. DISCOUNT FOR PROMPT PAYMENT

1 CY	N	%	DAYS	NET DAYS
2 NO		%	DAYS	OTHER IF '9' SEE SECT "E"
3 PD		%	DAYS	

12. PURCHASE OFFICE POINT OF CONTACT
MRF/MOR/MRF

13. THIS BLOCK APPLIES ONLY TO AMENDMENTS OF SOLICITATIONS

☐ The above numbered solicitation is amended as set forth in block 17. The hour and date specified for receipt of Offers ☐ is extended ☐ is not extended

Offers must acknowledge receipt of this amendment prior to the hour and date specified in the solicitation, or as amended by one of the following methods:

(a) By signing and returning _____ copies of this amendment; (b) By acknowledging receipt of this amendment on each copy of the offer submitted; or (c) By separate letter or telegram which includes a reference to the solicitation and amendment numbers. FAILURE OF YOUR ACKNOWLEDGMENT TO BE RECEIVED AT THE ISSUING OFFICE PRIOR TO THE HOUR AND DATE SPECIFIED MAY RESULT IN REJECTION OF YOUR OFFER if by virtue of this amendment you desire to change an offer already submitted, such change may be made by telegram or letter provided each telegram or letter makes reference to the solicitation and this amendment, and is received prior to the opening hour and date specified.

14. THIS BLOCK APPLIES ONLY TO MODIFICATIONS OF CONTRACTS

☐ THIS CHANGE IS ISSUED PURSUANT TO _____
THE CHANGES SET FORTH HEREIN ARE MADE TO THE ABOVE NUMBERED CONTRACT/ORDER.

☐ THE ABOVE NUMBERED CONTRACT IS MODIFIED TO REFLECT THE ADMINISTRATIVE CHANGES (SUCH AS CHANGES IN PAYING OFFICE, APPROPRIATION DATA, ETC.) SET FORTH HEREIN.

XX THIS SUPPLEMENTAL AGREEMENT IS ENTERED INTO PURSUANT TO AUTHORITY OF CHANGES CLAUSE, SECTION I OF THE CONTRAC
IT MODIFIES THE ABOVE NUMBERED CONTRACT AS SET FORTH HEREIN.

☐ THIS MODIFICATION IS ISSUED PURSUANT TO _____

15. CONTRACT ADMINISTRATION DATA

A. KIND OF MOD	B. MOD ABST RECIPIENT ADD BY	C. DATE OF SIGNATURE MODIFICATION	D. CHANGE IN CONTRACT AMOUNT INCREASE (+) DECREASE (-)	E. LOSING PO/CAO ON TRANSFER	F. GAINING PO/CAO ON TRANSFER	G. SVC/AGENCY USE
C			$			

16. ENTER ANY APPLICABLE CHANGES

A. PAY CODE	B. EFFECTIVE DATE OF AWARD	C. CONTRACT (1)TYPE (2)KIND	D. TYPE CONTR	E. SURV CRIT	F. SPL CONTR PROVISIONS	G. PAYING OFC CODE	H. DATE SIGNED	I. SECURITY (1)CLAS (2) DATE OF DD 254

17. REMARKS *(Except as provided herein, all items and conditions of the contract, as heretofore changed, remain unchanged and in full force and effect.)*

SUBJECT: REVISION TO STATEMENT OF WORK, NO COST
LABORATORY: AL/CFBA
PROJECT ENGINEER: CHRISTOPHER J. HASSER, 2ND LT, USAF, PHONE (513) 255-3671
PAYING OFFICE: DCMR ST LOUIS, 1222 SPRUCE ST., ST LOUIS MO 63103-2812
(314) 331-5218

18. ☐ CONTRACTOR/OFFEROR IS NOT REQUIRED TO SIGN THIS DOCUMENT XX CONTRACTOR/OFFEROR IS REQUIRED TO SIGN THIS DOCUMENT AND RETURN _____ COPIES TO ISSUING OFFICE

19. CONTRACTOR/OFFEROR (Signature of person authorized to sign)		22. UNITED STATES OF AMERICA (Signature of Contracting Officer)	
BY		BY	
20. NAME AND TITLE OF SIGNER (Type or print)	21. DATE SIGNED	23. NAME OF CONTRACTING OFFICER (Type or print)	24. DATE SIGNED
		PHYLLIS J. MORSE	92 JUN 27

AFSC FORM 702 AUG 84 PREVIOUS EDITION WILL BE USED.

1. This modification is issued to reflect no-cost changes to Section C, Description/Specifications dated 9 December 1991 as shown on pages 3 - 4 of this modification.

2. The contractor does hereby agree to attached changes with no increase to the cost or fixed fee and without a requirement for a time extension to complete contract requirements.

3. This Supplemental Agreement constitutes a full settlement of any claims of the contractor under the contract, including the clause entitled "Changes", arising out of or in connection with the changes effected hereby.

BONNEVILLE SCIENTIFIC PHASE II SBIR CONTRACT NO. F41624-91-C-6001

REVISION OF CONTRACT SECTION C
9 December 1991

1. (unchanged)

2. The contractor shall deliver a turnkey Tactile Sensing System which shall have the following performance parameters and capabilities:

a. At least a 40 MHz processor to allow for high performance operations.

b. A RISC-based architecture.

c. Capable of rapid processing of large amounts of data, images and multiple concurrent applications, performing at least 4 MFLOPS of double-precision power, and processing at greater than 28 MIPS.

d. At least 16 MB of internal RAM and 200 MB of internal disk storage capacity.

e. External mass storage capability with at least a 1.3 GB SCSI drive and a 2.3 GB tape backup, and be able to access 5.25" CD-ROM disks.

f. UNIX-based operating system.

g. A color monitor, preferably with a 16" screen.

h. A 32-bit System Bus with at least two slots to allow for a high bandwidth of input/output to transfer large amounts of data via a VME chassis through a 32-bit shared-memory window.

i. Ethernet ports to allow for future integration with existing VAX computer systems and RS-432 serial ports for integration with printers, modems, and other serial devices.

j. SCSI ports to allow access to CD-ROM drives, hard disks, tape devices, and other I/O peripherals.

k. An internal 3.5" DOS-compatible floppy disk drive.

l. A cross compiler and target-level debugger, selected by BSI, costing less than $9,900, and deliverable with the final system.

m. A GNU C software package for the SUN SPARCstation, obtained at no cost to the Air Force.

n. Ability to acquire raw time-of-flight (TOF) data and

calculate calibrated TOF data.

o. Storage of raw TOF data, calibrated TOF data, and calibration offsets in either the SUN SPARCstation memory or the 68020 memory. The contractor will decide which memory to store the data in and will provide to the Air Force detailed descriptions of where in memory the data will be located and the storage configuration used for the data (i.e., data format).

p. A debug and system checkout mode. This mode would include any diagnostic routines that BSI develops as a part of its system test plan.

3. In addition, the contractor will:

a. Provide CAD drawings sufficient for the Air Force to calculate taxel areas.

b. Give any information obtained about the spring constants of the elastomer.

c. Provide all information on the hysteresis and other nonlinearities of the elastomer that the contractor has obtained through development and testing done in the course of this contract.

d. Purchase a maintenance contract for the SUN SPARCstation, as a direct charge, for only that time period when the SUN SPARCstation is in the contractor's possession. (This modifies the original proposal to purchase the maintenance contract for two years.)

4. Technical Objective 3 of the proposal changed to reflect usage of a single 68020 board and a SUN SPARCstation with specifications as outlined in Item 2, above.

THIS PAGE

INTENTIONALLY

LEFT BLANK

APPENDIX 8

Proposal for Nine-Month Contract Extension

Extension Proposal for Air Force Contract No. F41624-91-C-6001
Title: Anthropomorphic Cutaneous Tactile Sensing on Dexterous Mechanical Hands
Proposer: Bonneville Scientific, Inc.
918 East 900 South
Salt Lake City, UT 84105

SUMMARY

This is a proposal for the extension of Air Force Contract No. F41624-91-C-6001, entitled "Anthropomorphic Cutaneous Tactile Sensing on Dexterous Mechanical Hands" . The contract goal was to research, develop, fabricate, install and test ultrasonically-based tactile sensors on one of the Air Force's Utah/MIT Dextrous Hands. Several problems needed to be overcome for this to be done. Many of those were solved, and the hand was sensorized. The overall system did not work. Preliminary tests done by Bonneville on one tactile sensor array and the electronics indicated that there were problems in both the electronics and the sensors. Two-percent of the 3200 sensor elements were tested, some worked, some did not. Because time and finances did not allow a complete analysis of the sensor system, the possibility of unknown problems in all parts of the system also exists. This proposal outlines the method which Bonneville Scientific proposes to follow in order to find out the extent and nature of the problems and, if practical, solve them.

In Part I of this extension, an in-depth analysis of the sensors which are on the hand will be conducted. This will allow Bonneville to determine the extent of the problems, find additional problems if there are any, and make a decision on the appropriate method to correct the problems. The decision at the end of Part I of the extension will determine what approach will be taken in Part II.

In Part II, our findings will be presented to the Air Force technical personnel and a decision will be made on which combination of possible solutions will be pursued. If the probability of failure is too high, it may be decided that the extension should be terminated.

Once a plan has been established, Bonneville will conduct preliminary experiments to determine the feasibility of key elements in the plan. If success appears likely, Bonneville will proceed to sensorize as many of the hand's digits as time and funding allows.

Part II will also involve <u>additional</u> work. Bonneville must make changes to the electronics, debug the overall sensor system and write additional software to allow the display of the tactile data in a sensor-by-sensor format. The sensors and electronics must also be tested with rubber sheets instead of cast rubber coverings.

STATEMENT OF WORK

Part I

1. The first task Bonneville will undertake is to modify an existing test fixture to allow efficient evaluation of the performance of the existing sensors. This system uses a personal computer to conveniently scan a sensor array and display the tactile data in an image format or repetitively operate a single element. With this modified test fixture, each array can be tested in a repeatable and convenient manner. Test fixture modifications will eliminate the serious noise problems now encountered in using the current test fixture and reduce the time that it currently takes to test the sensors.

2. The second task will be to test all of the arrays. It is necessary to determine the number of elements working. To date, only about <u>two percent</u> of the elements have been tested. It is unknown if the current data are representative of the rest of the sensor arrays.

Using the test fixture, an array will first be scanned to quickly determine which elements work well, then the remaining elements will be tested, element-by-element, using an oscilloscope in order to ascertain element status, echo strength, noise level, and the effects that manipulating the rubber has on the signal strength. Analysis of these test results should uncover patterns in the problems, which may lead to better solutions. It will also show whether any additional quirks or malfunctions exist in the sensors.

3. In this task, one of the arrays will be removed and an in-depth autopsy will be performed on it. The major goal will be to find out why there appear to be elements which chronically have small signals. The answer to this will have an impact on the choices made in Part II. Verification of the location and character of indicated breaks in the connections will also be done at this time.

Part II

1. In Part II of the extension, Bonneville will analyze the information gathered in Part I, and discuss the findings with the Air Force technical personnel. The direction taken in Part II will be entirely dependent on the findings of Part I. The following is a list of the options which from which the choices will be made.

a. <u>Decision not to proceed</u>. The first option may be to decide that the probability of success is not high enough to proceed. This decision would be reached if

significant problems are found for which no practical solution could be conceived, or if so many problems were found that, even if all of them were solvable, it would be improbable that the remaining time or money would be sufficient.

b. Make new PVDF layers for the arrays. If no additional problems than those currently known are encountered, and the remaining sensors are in a condition comparable to the one which has been partially tested, new PVDF layers could be made for the sensors and the existing cables used. The sensor design would most likely be modified to eliminate two rows so that more robust connections could be made by using copper-coated Kapton instead of PVDF and thus eliminate the folding of the PVDF to make these connections. This would effectively eliminate the areas where most of the cracking is known to occur.

c. Complete sensor redesign including new cables and new PVDF. If the problems in the sensor are more extensive than now known, a new design could be necessary to eliminate problems in the arrays. In this case, a new design for the arrays will be created which will leave gaps in the sensorized areas to facilitate connections to the sensor and minimize folding. The gaps in the arrays would be placed in areas of the finger which are deemed less critical to the Air Force experiments. This method is likely to reduce the number of arrays which could be made with the time and funds left.

2. After an option is decided upon, preliminary, small-scale experiments and tests will be performed to assess the method chosen.

3. Based on the preliminary work above, one full scale array will be made, installed and tested. If that is successful, sensorization of the rest of the hand will continue in tandem with the work in task 4 below. However, it must be understood that, depending on the problems which are encountered and the time it takes to solve them, the number of arrays produced will be affected.

The goal will be to sensorize the hand based on the option chosen, with the following priority:

a. The distal segment on the index finger
b. The distal segment on the thumb
c. The medial segments of the index finger and thumb
d. The distal and medial segments of the third finger.

e. The proximal segments of the above three digits.
f. All four digits

The number of arrays constructed will be entirely dependent on how much time and money remain. The decision will be made in conference with the Air Force, and the sensors they believe to be most needed will be fabricated and installed first.

4. In addition to making the sensors, several other tasks must be done. They include the following.

a. Eliminating noise sources in the electronics. Work needs to be done to reduce the noise level in the electronics.
b. Debug electronics, modify excitation circuitry. One of the problems encountered was a deficiency in the excitation circuitry which will require some straightforward engineering work to resolve. A final debug of the electronics while they are attached to the sensors still needs to be completed.
c. Fabricate, install and test thinner rubber pads. A method to apply thinner rubber pads for the sensor needs to be investigated. These will need to be fabricated in sheets and glued onto the sensor. Some testing will be necessary for this to be done.
d. Computer software/hardware integration. The software and the hardware were debugged as much as possible prior to system assembly. However, a system debug has not been conducted. This is an important process which needs to be completed.
e. Create software for display. It is necessary to create software which will take the tactile information and display it as numbers on a computer screen. These numbers need to be segregated by array and spatially correspond to the array elements. It has become obvious that the Air Force will have considerable difficulty determining the operational quality of the sensor without this software.
f. Complete system burn-in and final debug. In order to ensure proper system operation, the system must be burned-in and subjected to stress tests. These tests will be designed to "break" the system. If the system does not pass these tests, more debugging may be performed if time and funds permit. Stress tests will be conducted in such a way as to find the physical limitations of the system on the least important array on the hand.

s16.66H

ANTICIPATED PROJECT SHEDULE FOR EXTENSION OF
ANTHROPOMORPHIC CUTANEOUS TACTILE SENSING ON DEXTEROUS MECHANICAL HANDS"
AIR FORCE CONTRACT NO. F41624-91-C-6001

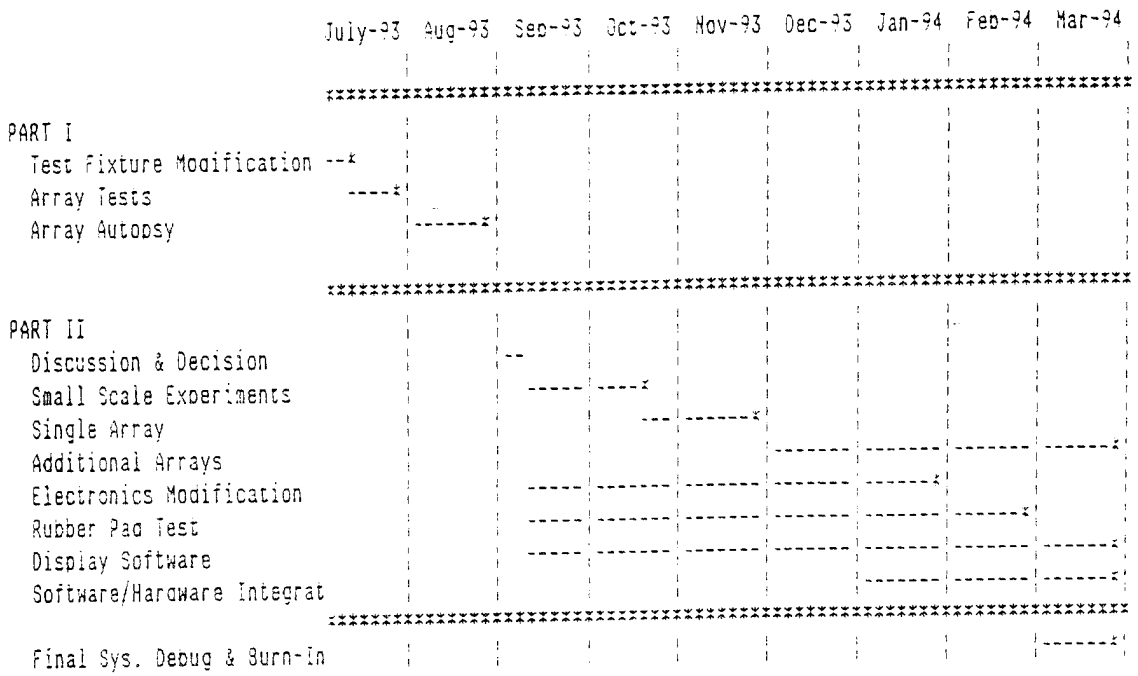

APPENDIX 9

Rubber Characteristics

11-18-93 GBF

HULS FELT IS 1/2" x 1/2" x 3/32"

BAR & PLATE SET-UP

25% COMPRESSION

NO2 MINUTE HOLD

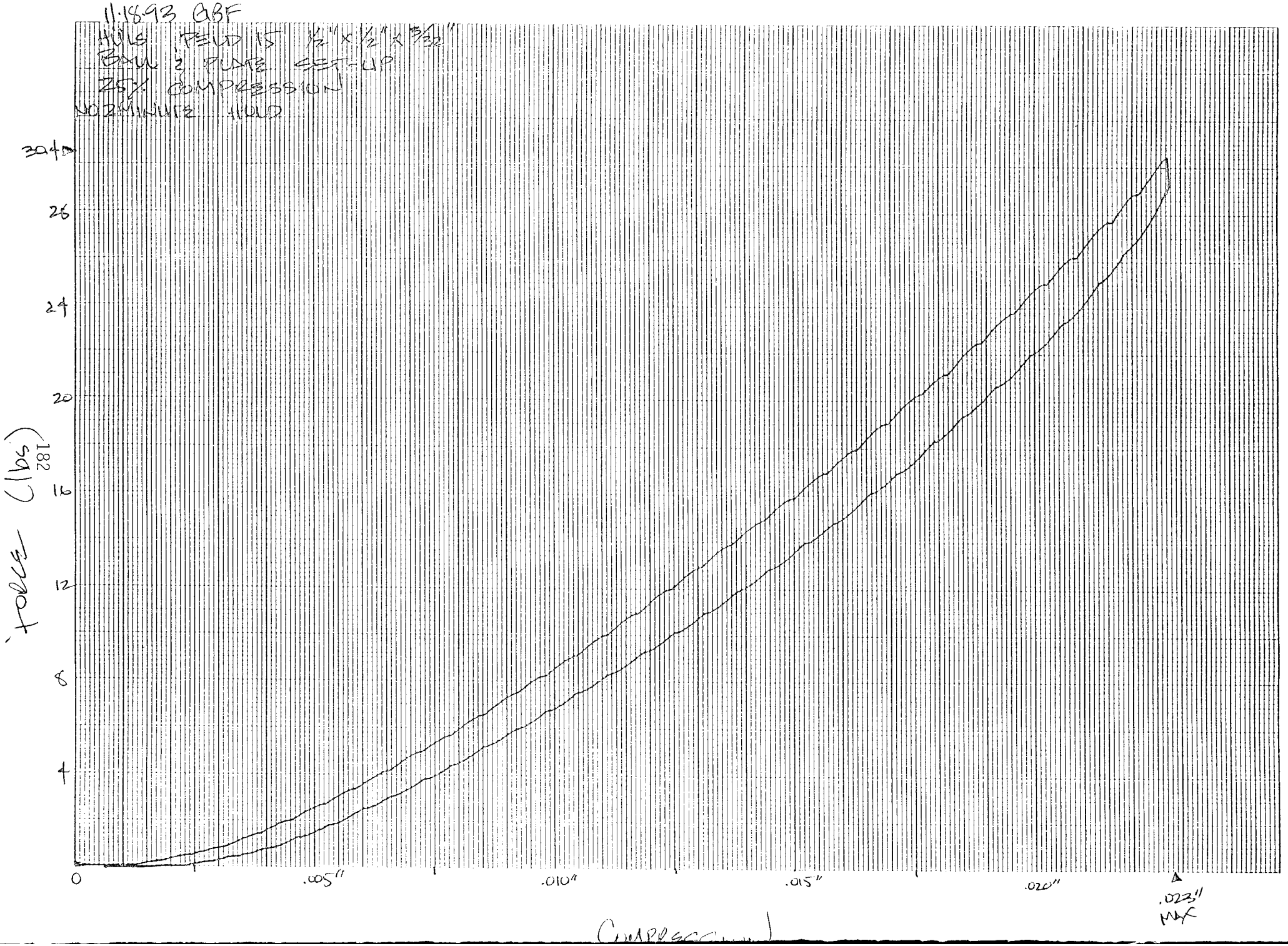

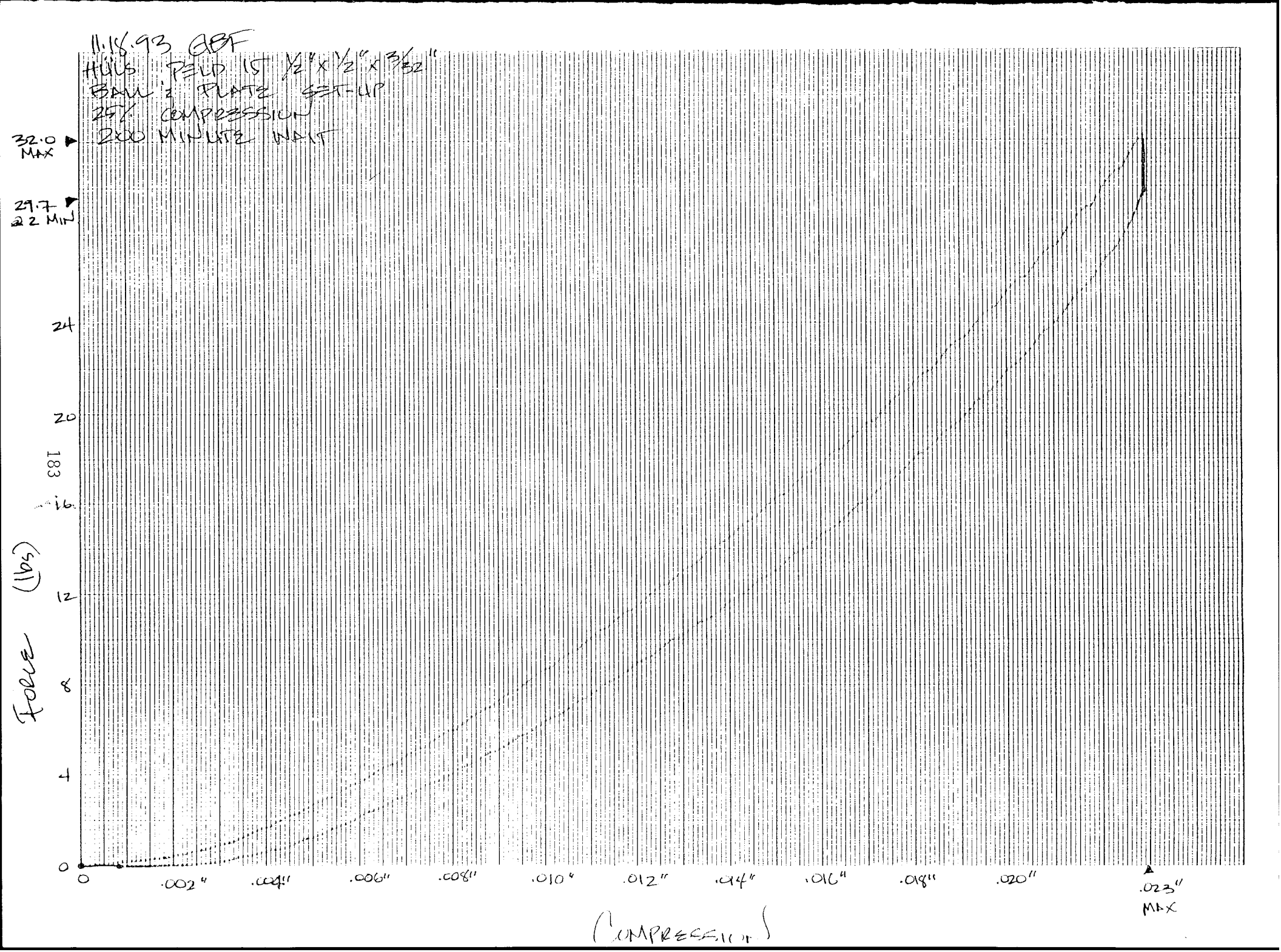
11.18.93 GBF
HILLS FELD 15 1/2" x 1/2" x 3/32"
BALL & PLATE SET-UP
25% COMPRESSION
2:00 MINUTE WAIT
32.0 MAX
29.7 22 MIN
24
20
16
12
8
4
0
Force (lbs)
183
0
.002"
.004"
.006"
.008"
.010"
.012"
.014"
.016"
.018"
.020"
.023" MAX
(Compression)

11.18.93 GBF

Hills silicone 1/8" x 1/2" x 3/32"
10% compression
Ball & plate setup
2 minute hold

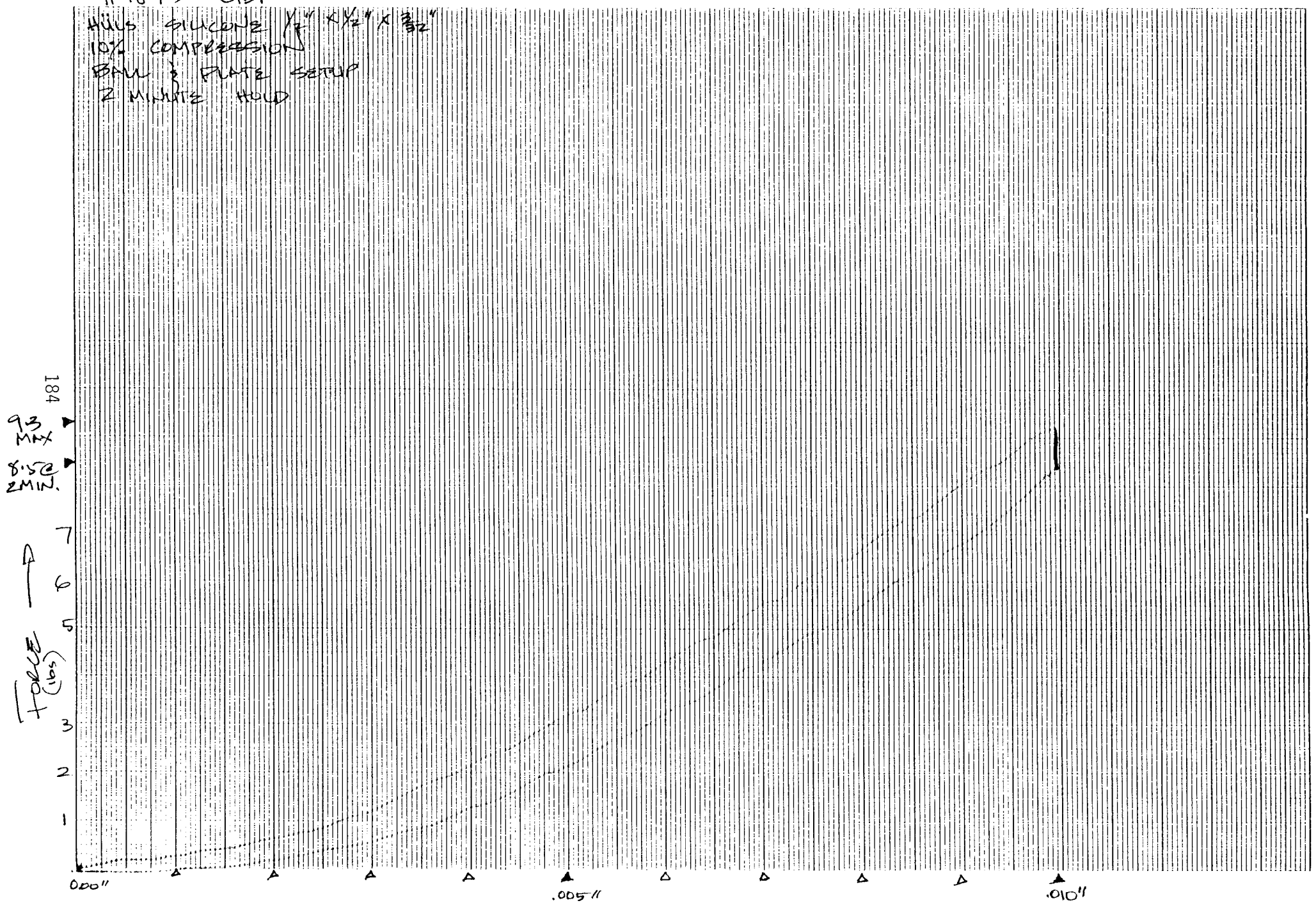

Compression

11.16.73 GBF

HULS SILICONE 1/2" x 1/2" x 3/32"

10% COMPRESSION

BALL & PLATE SET-UP

NO HOLD

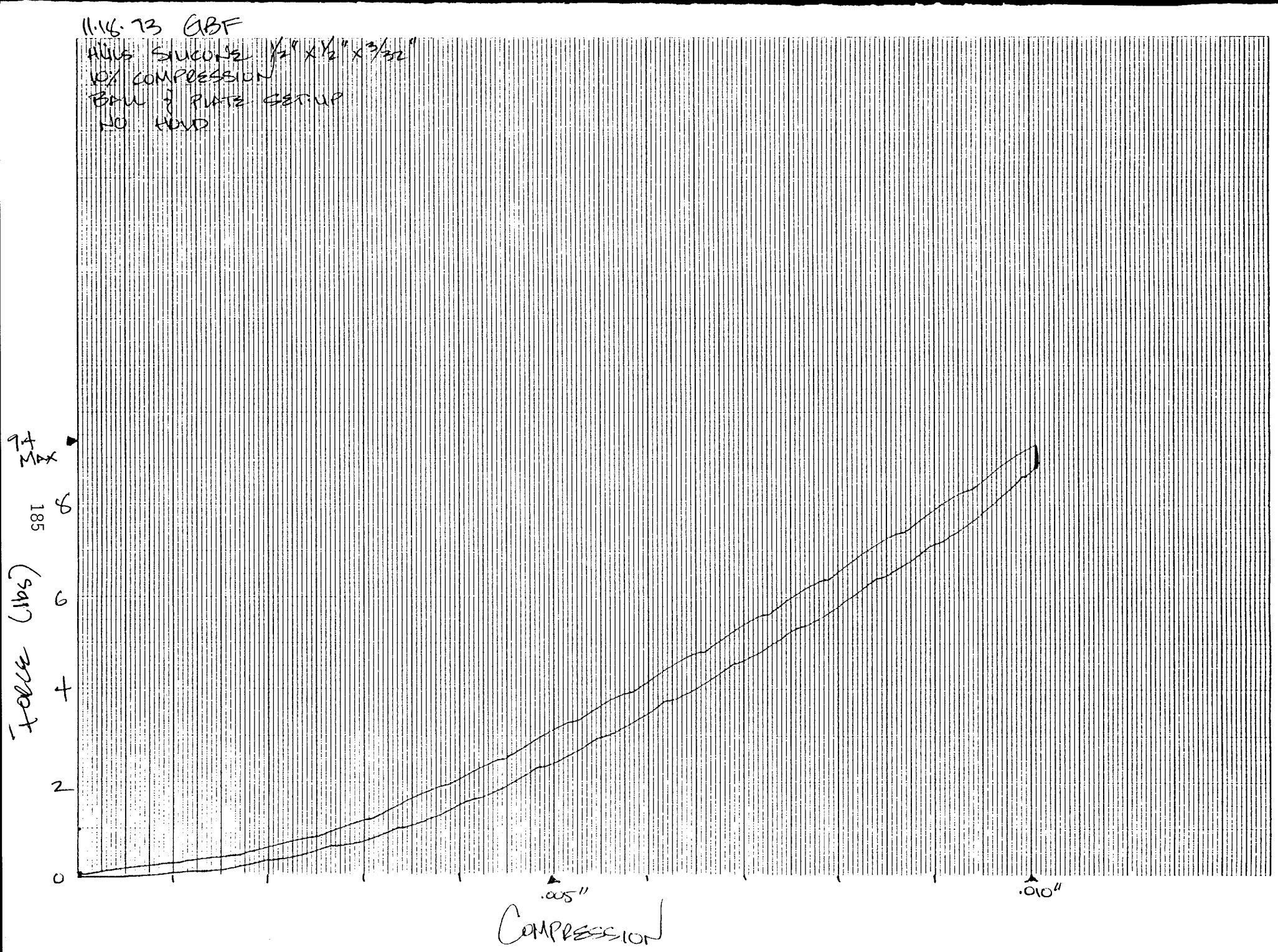

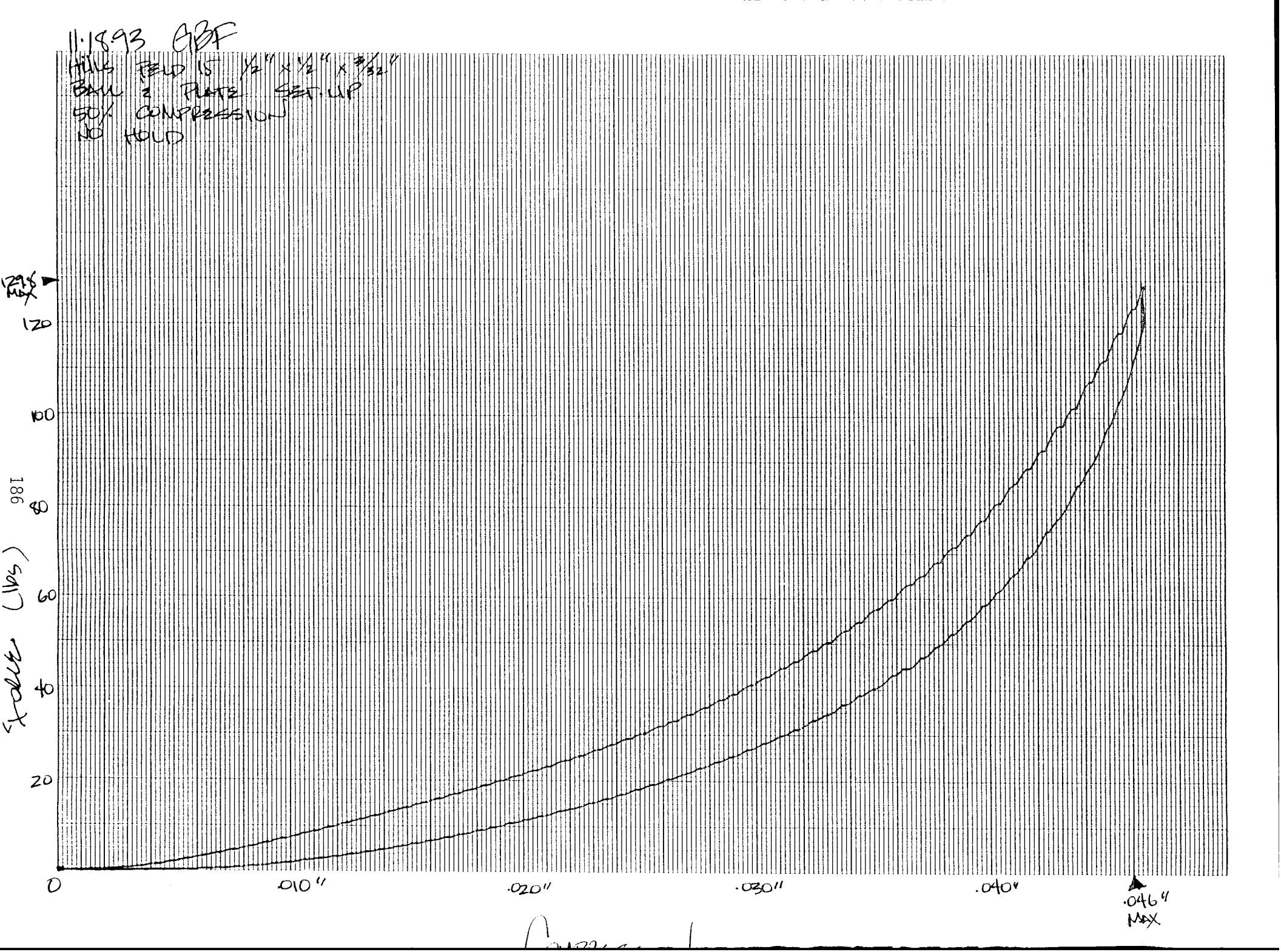
11.18.93 EBF
HILL FIELD IS 1/2" x 1/2" x 3/32"
BAM 2 PLATE SET-UP
50% COMPRESSION
NO HOLD
129.5 MAX
120
100
80
60
40
20
186
Force (lbs)
0
.010"
.020"
.030"
.040"
.046" MAX

11.18.93 GBF

HILLS FIELD 15 ½" × ½" × 3/32"

BALL & PLATE SET UP

40% COMPRESSION

2 MINUTE HOLD

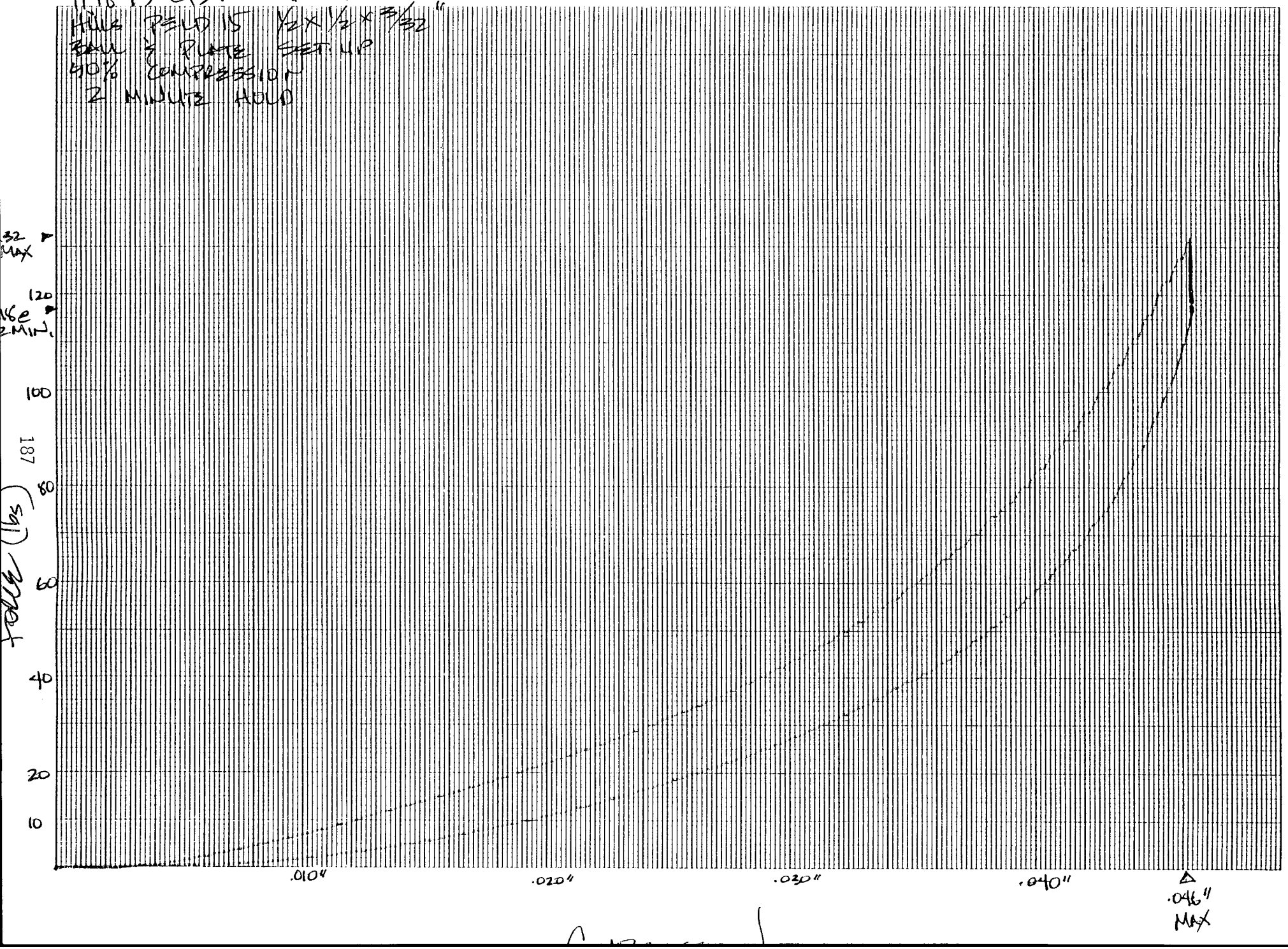

11.19.93 GBF

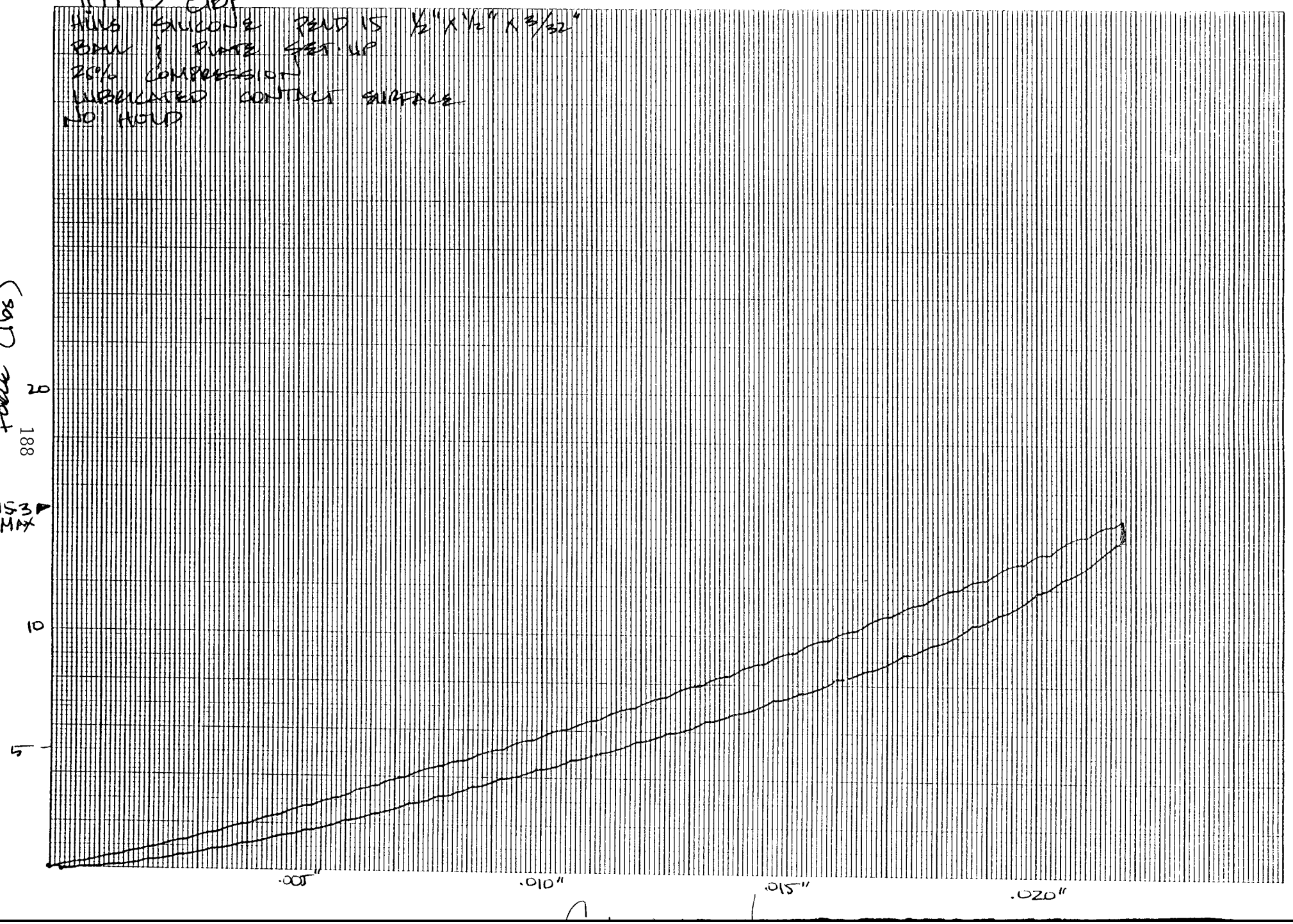
HULS SILICONE PELD 15 1/2" X 1/2" X 3/32"
BALL & PLATE SET-UP
25% COMPRESSION
LUBRICATED CONTACT SURFACE
NO HOLD
Force (lbs)
20
15.3 MAX
10
5
.005"
.010"
.015"
.020"

11.19.93 GBF

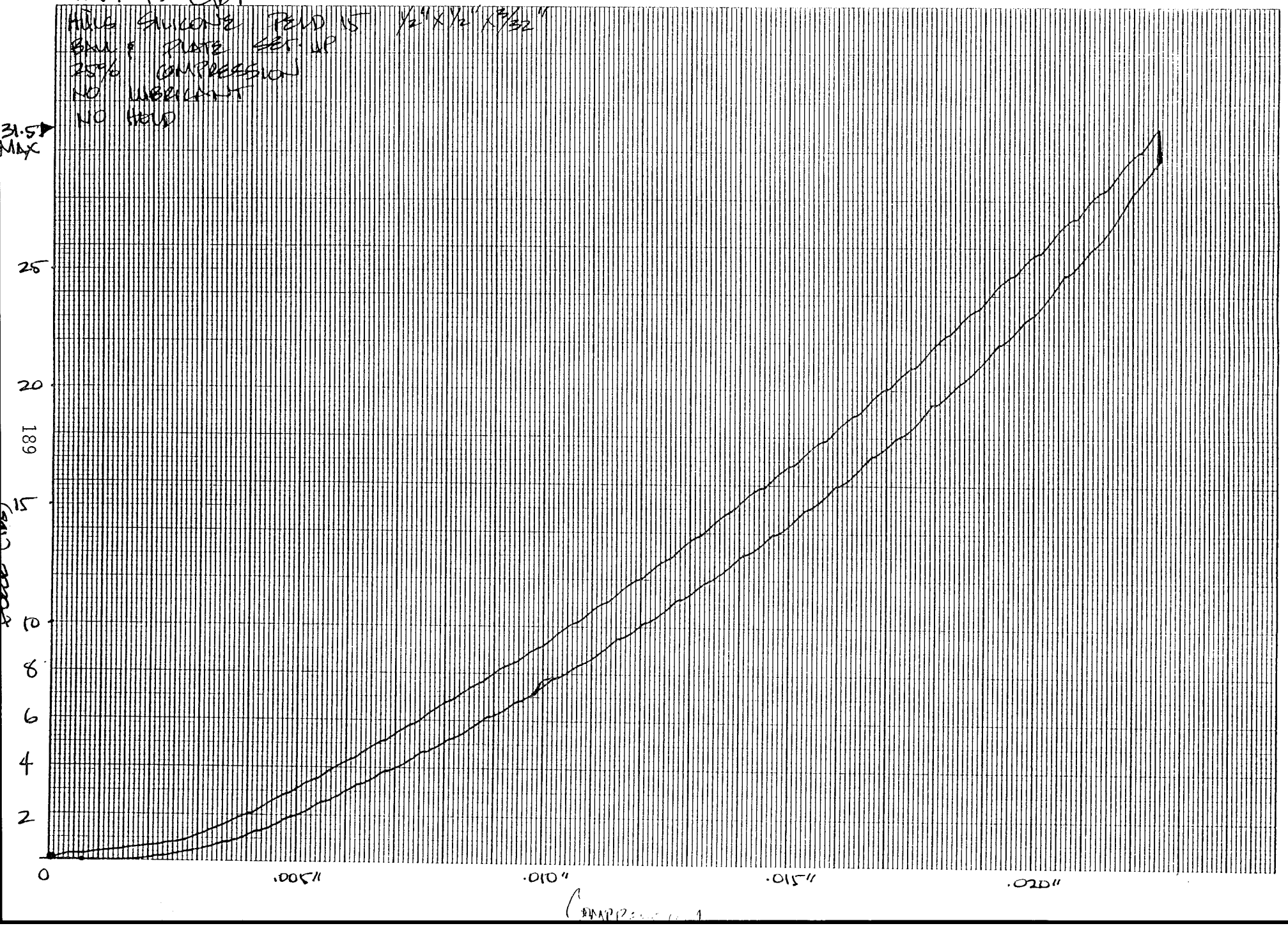
HULS SILICONE PELD 15 1/2" X 1/2" X 3/32"
BALL & PLATE SET-UP
25% COMPRESSION
NO LUBRICANT
NO HOLD
31.5 MAX
25
20
15
10
8
6
4
2
0
.005"
.010"
.015"
.020"

THIS PAGE

INTENTIONALLY

LEFT BLANK

APPENDIX 10

Sensor Cable Wiring

12/8/92

AIR FORCE INTERCONNECT

SECTION 1

Revised Air Force sensor
10/26/93

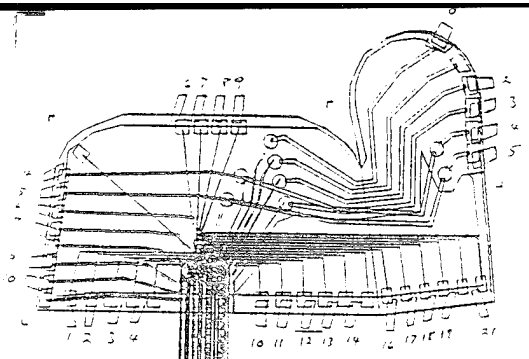

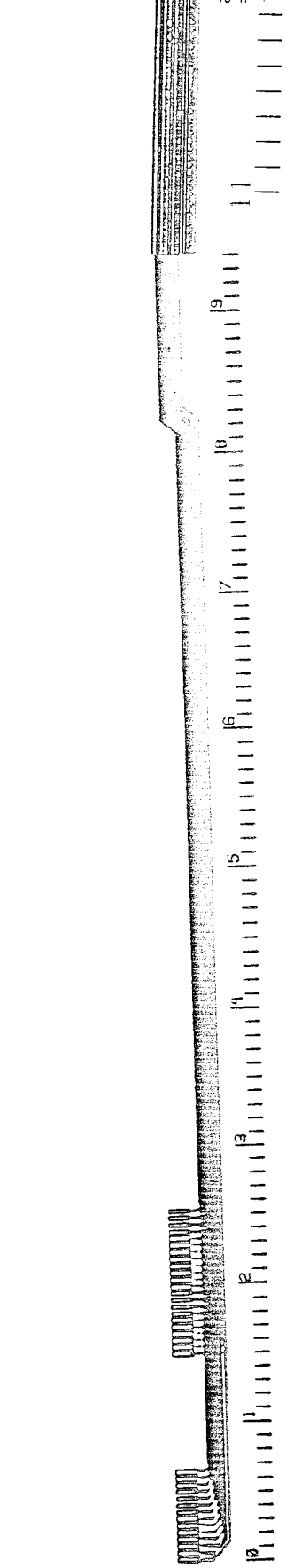

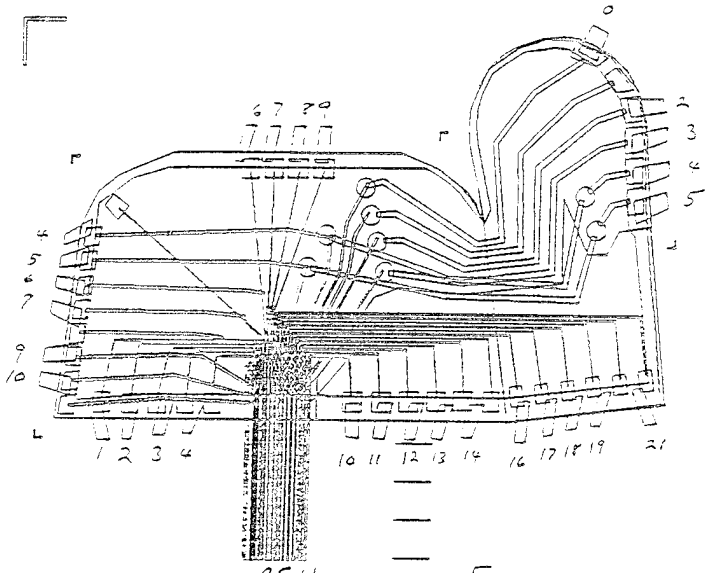

NEW	OLD
OPEN	5
4	4
3	3
2	2
1	1
OPEN	0
6	6
7	7
8	8
9	9
21	21
OPEN	20
19	19
18	18
17	17
16	16
OPEN	15
14	14
13	13
12	12
11	11
10	10

REC

NEW	OLD
OPEN	11
10	10
9	9
OPEN	8
7	7
6	6
5	5
4	4
0	0
OPEN	1
2	2
3	3
GROUND	GROUND
GROUND	GROUND

EXC

12/8/92

AIR FORCE INTERCONNECT

REVISED SENSOR 10/26/93

SECTION 2

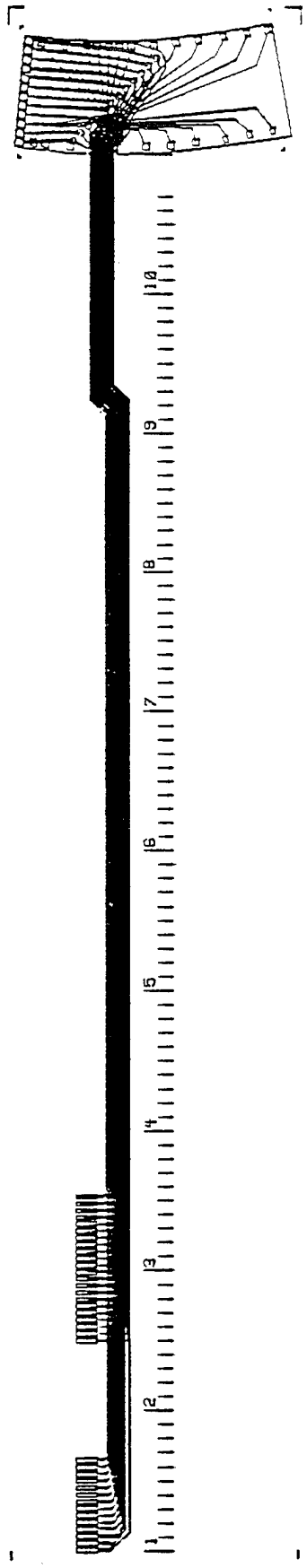

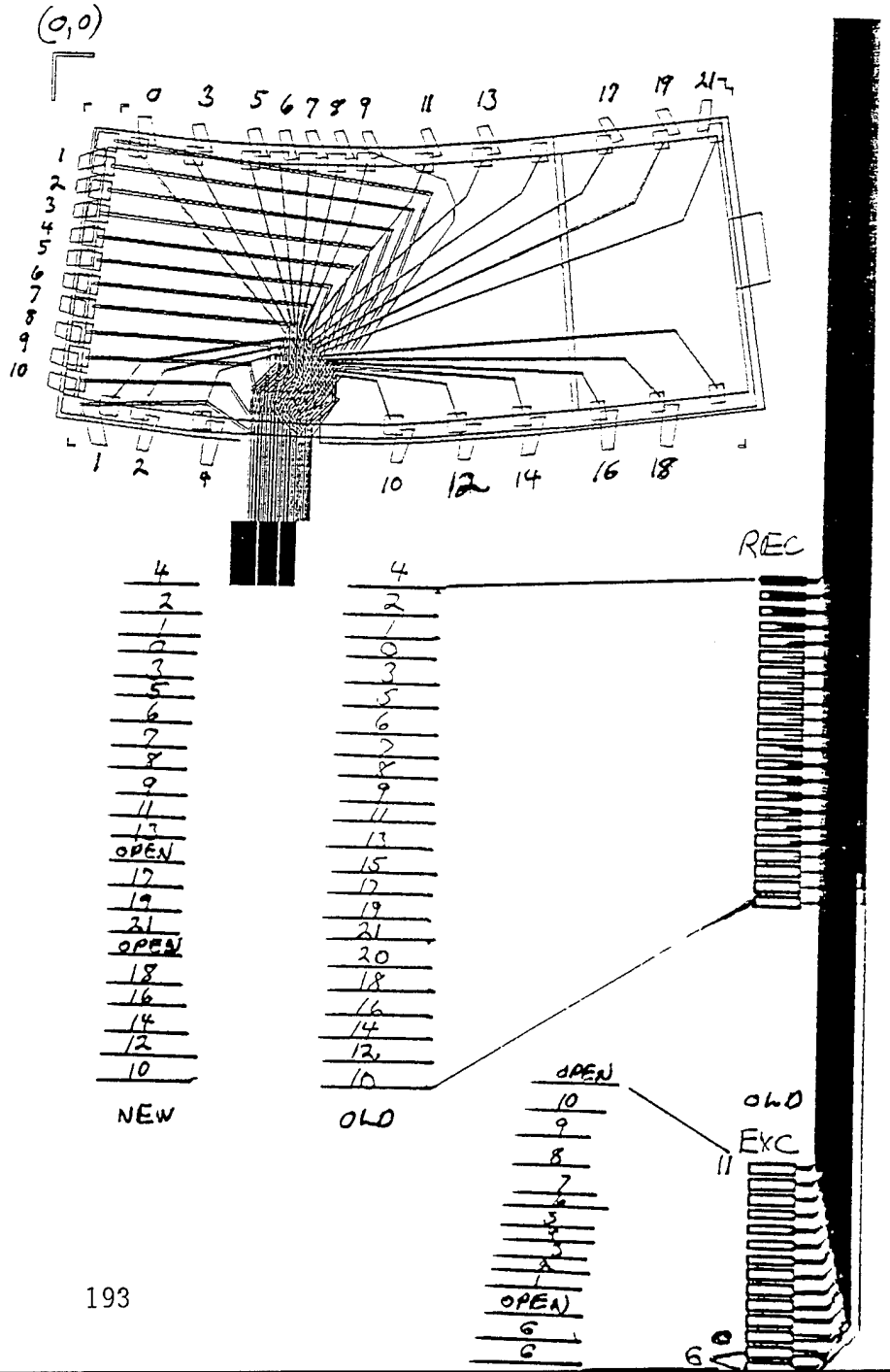

12/8/92

AIR FORCE INTERCONNECT

REVISED SENSOR 10/26/93
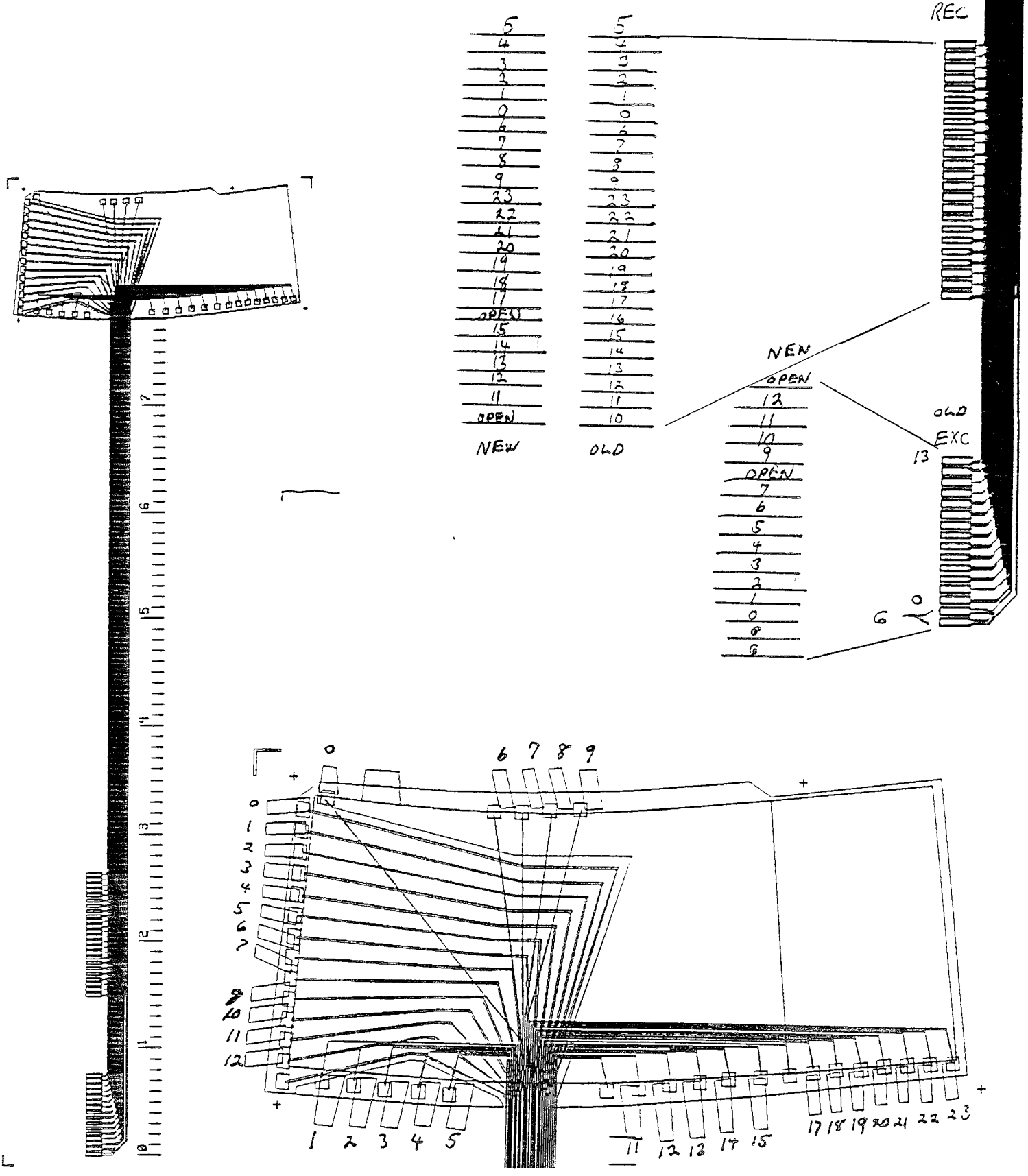
SECTION 3